Experiment Design Requirements and Guidelines
NASA 931 KC135A

Aircraft Operations Division

February 2003

National Aeronautics and
Space Administration
Lyndon B. Johnson Space Center
Houston, Texas

Experiment Design Requirements and Guidelines

NASA 931 KC135A

February 2003

Basic PCN 1

Approved by

Original Signed By:

_____

John S. Yaniec
Lead, Reduced Gravity Program

Change Record

Rev.	Date	Process Owner/Extension Alternate/Extension	Description
Basic	May 2002	John S. Yaniec/49211 Dominic Del Rosso/49113	Initial Release
Basic PCN 1	February 2003	John S. Yaniec/49211 Dominic Del Rosso/49113	Incorporate changes to Structural, Cargo Strap, and Pressure Systems.

Table of Contents

1. INTRODUCTION 6
1.1 Purpose 6
1.2 Scope 6
1.3 List of Acronyms 7
2. TEST EQUIPMENT DESIGN REQUIREMENTS 8
2.1 Test Equipment Structural Design Requirements 8
2.1.1 Takeoff/Landing 8
2.1.2 In-Flight Loads 12
2.2 Aircraft Loading 12
2.3 Pressure/Vacuum System Requirements 13
2.3.1 Classification Requirements 13
2.3.2 Pressure System Design Requirements 14
2.3.3 Pressure System Test and Inspection Requirements 17
2.4 Electrical 18
2.5 Free Float 21
2.6 Overboard Vent 21
2.7 Laser 23
2.7.1 Class Designation 23
2.7.2 Protective Housings 24
2.7.3 Equipment Labels 24
2.7.4 Viewing Portals and Collecting Optics 24
2.8 Emergency Procedures 24
2.9 Hazardous Materials 25
2.10 Tools 25
2.11 Containment of Loose Parts and Equipment (Ground and Flight Ops) 25
2.12 Liquid Containment 26
2.13 EMI (Electromagnetic Interference)/RFI Checks 26
2.14 Cleaning Equipment for Zero-G Flight 26
2.15 Touch Temperature for Research Hardware 27
2.16 KC-135 Noise Levels 27
2.17 Miscellaneous Guidelines 27
Index 29

List of Figures

Figure 1. Test Cabin Floor Schematic for Reference Only 9
Figure 2. Example: Cargo Strap Schematic for Reference Only 10
Figure 3. Stud/Spacer Floor Attachment Assembly for Reference Only 11
Figure 4. Fully Loaded Aircraft Typical 11
Figure 5. Picture of Free-Float Experiment 21
Figure 6. Overboard Vent Line for Reference Only 23

List of Tables

Table 1. Floor Attachment Hardware 9
Table 2. Minimum Wire Gauges 20
Table 3. Overboard Vent Flow Rates 22

1. INTRODUCTION

The Reduced Gravity Program, operated by the National Aeronautics and Space Administration (NASA), Lyndon B. Johnson Space Center (JSC) in Houston, Texas, provides a "weightless" environment, similar to the environment of space flight.

1.1 Purpose

The purpose of this Design Requirements document is to provide a guideline for existing and potential users of the Reduced Gravity Program. This document outlines equipment design requirements and details user requirements and guidelines.

1.2 Scope

This work instruction applies to all users and potential users of the JSC Reduced Gravity Program. Requirements in applicable documents supercede EDRG.

1.3 References

American National Standards Institute (ANSI) Z-136.1 Safe Use of Lasers

AOD 33898, Interface Control Document NASA 931 KC135A

JHB-1710.13B, JSC Requirements and Handbook for Design, Inspection, and Certification of Pressure Vessels and Pressurized Systems

JPG-1700.1, JSC Safety and Health Handbook

1.4 List of Acronyms

AN	Army/Navy
ANSI	American National Standards Institute
ASME	American Society of Mechanical Engineers
CFR	Code of Federal Regulations
DIA	Diameter
DOT	Department of Transportation
EMC	Electromagnetic Compatibility
EMI	Electromagnetic Interference
JHB	Johnson HandBook
JSC	Johnson Space Center
MAWP	Maximum Allowable Working Pressure
MSDS	Material Safety Data Sheet
NAS	National Aerospace Standard
NASA	National Aeronautics and Space Administration
NPT	National Pipe Thread
OSHA	Occupational Safety and Health Administration
RFI	Radio Frequency Interference
RGO	Reduced Gravity Office
SAE	Society of Automotive Engineers
SCFM	Specific Cubic Feet per Minute
TRR	Test Readiness Review

2. TEST EQUIPMENT DESIGN REQUIREMENTS

The following chapter provides a detailed description of test equipment design requirements and guidelines that must be met for flight on the NASA KC-135.

Be sure to retain all documentation throughout the design process so that it may be presented later in the flight approval process.

2.1 Test Equipment Structural Design Requirements

Structural integrity of all equipment flown aboard NASA's KC-135 must be verified [via accepted method(s), analysis, test, demonstration, similarity, etc.] and documented accordingly.

Factors of Safety (FS), of 2.0 or greater, shall be applied to all structural or fracture critical elements. RGO encourages designers to use FS greater than 2.0 whenever practical.

Note

Attention to quality of workmanship and materials is critical. Exceptions to the above (e.g., Flight Hardware) will be considered on a case-by-case basis and only with proper documentation.

2.1.1 Takeoff/Landing

Take off and landing configurations of all equipment must be verified to withstand the "hard landing loads" described herein. It is the expressed intent of this verification that any item, component, or subassembly (or enclosures specifically designed to retain said items), with the potential to detach and become a hazard to the researchers, crewmembers, and/or aircraft, not yield.

KC-135 test equipment must comply with the following structural design requirements and have the necessary documentation.

1. G-Load Specifications
   a. All test equipment (i.e., fasteners, individual components, frames, and full assemblies, or enclosures around said items) must be designed to withstand the following g-loads in takeoff and landing configurations.
      i. Forward 9 g's
      ii. Aft 3 g's
      iii. Down 6 g's
      iv. Lateral 2 g's
      v. Up 2 g's
   b. Structures are to be analyzed using accepted practices (i.e., Free Body Diagrams) with load vectors applied at accurate centers of gravity. Material yield strengths are to be used as the maximum allowable throughout all design calculations.
2. Floor Attachment Hardware
   a. The Reduced Gravity Office (RGO) will provide all of the hardware required for fastening the test equipment to the floor of the KC-135. Table 1 details (AOD 33898, Interface Control Document NASA 931 KC135A) the RGO-provided hardware to be utilized with test equipment:

Floor Hardware Description	Hardware Dimensions	Yield Tensile Strength (lbs)	Single Shear Strength (lbs)
NAS 184-6 Steel Studs	3/8" DIA – Lengths Vary	5000 lbs	5000 lbs
AN-6 Steel Bolts	3/8" DIA – Lengths Vary	5000 lbs	5000 lbs
2.0" Wide Cargo Strap	Lengths Vary	5000 lbs	N/A
1.5" Wide Cargo Strap	Lengths Vary	1000 lbs	N/A
1.0" Wide Cargo Strap	Lengths Vary	400 lbs	N/A
*Floor Spacers	Heights Vary	N/A	N/A

Table 1. Floor Attachment Hardware for Reference Only

b. Aluminum floor spacers are used to direct equipment weight loads directly into the aircraft floor beams (bypassing the floor foam), and to load studs or bolts in single shear at each floor attachment location. They are not utilized when cargo straps are used to fasten equipment to the floor. The maximum amount of weight allowed to rest on one spacer in a 1 g environment is 200 lbs/spacer (i.e., 1200 lbs/spacer is allowed in a 6 g down load case). See Figure 3.

c. Test equipment fastened to the floor using studs or bolts must possess a frame or base-plate or fixture that matches the floor attachment grid in the KC-135 test cabin. Floor attachment holes in the experiment base plate must be centered on a 20" ± 0.05" square pattern with holes drilled using a recommended clearance hole of 1/2" ± 0.125" diameter. See Figure 1.

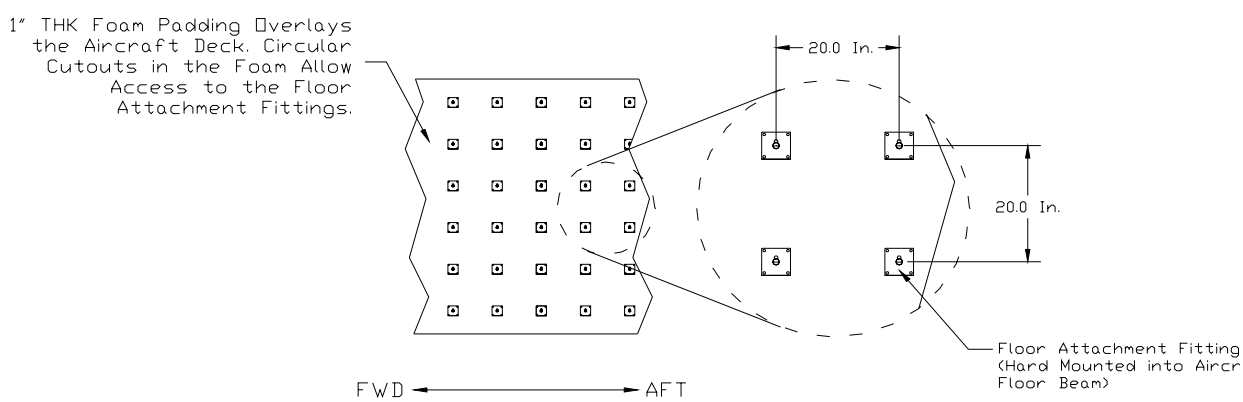

Figure 1. Test Cabin Floor Schematic for Reference Only
(See AOD 33898, Interface Control Document NASA 931 KC135A)

d. Cargo straps may be used to tie down equipment to the test cabin floor. Straps are provided by the RGO (See AOD 33898, Interface Control Document NASA 931 KC135A for tensile strength limits of cargo straps). When using cargo straps, it is essential to design load-bearing beams and/or handles with sufficient load capacities to withstand g-load specifications and not exceed working limit of straps in specific configuration. See Figure 2 for a cargo strap attachment schematic.

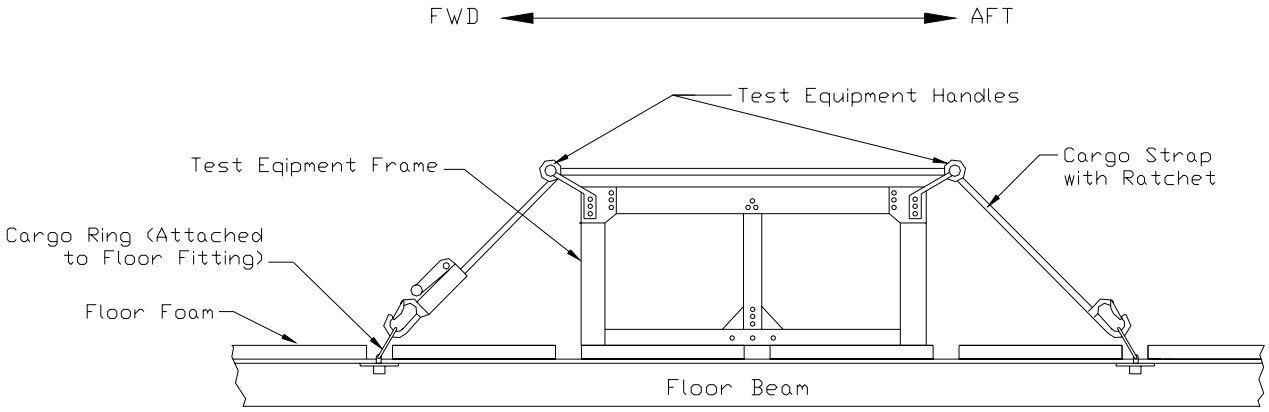

Figure 2. Example: Cargo Strap Schematic for Reference Only

e. Test equipment resting on the floor padding instead of spacers (typically the case when cargo straps are used) must not exceed the allowable floor loading of 200 lbs/ft^2 (this is for the in-flight load case, not ground loading) without proper floor shoring. The RGO will implement any floor shoring required and must be coordinated in advance.

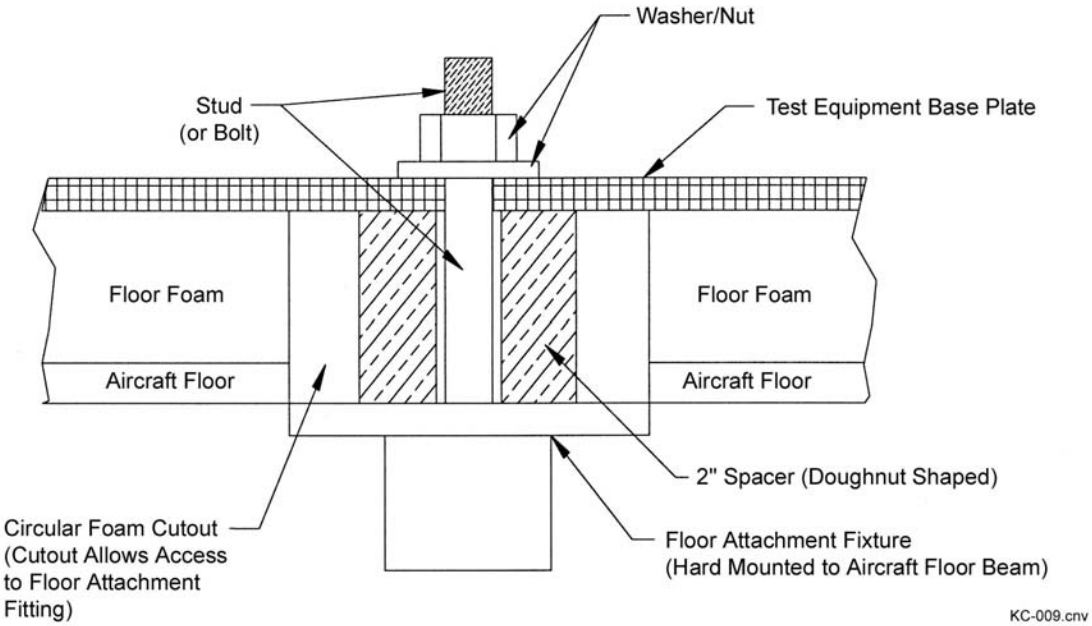

Figure 3. Stud/Spacer Floor Attachment Assembly for Reference Only

f. If test equipment is over 10 feet in length (length being along the forward/aft axis of the fuselage), structure of the test equipment must allow for fuselage bending without increased stress in the aircraft frame. For questions or concerns contact RGO.

Figure 4. Fully Loaded Aircraft Typical

2.1.2 In-Flight Loads

Experimental equipment should consider in-flight load cases in design. Depending upon the test configuration, free floating, anchored, etc., certain load cases should be considered for safety of flight as well as mission success.

2.1.2.1 Free Floating Equipment

1. Handling aids should be able to withstand two times the weight of the equipment without damage

2. Equipment (or protective cage) should withstand a drop of 4 feet at .75 g without damage.

3. Umbilical on Free Floating equipment shall be strain relieved to two times the equipment weight, and any energy in the umbilical adequately isolated from personnel (electricity, GFI, pressure, chemical, etc)

2.1.2.2 Deployed During Reduced Gravity

1. Structures deplyed during the reduced gravity portion of flight should consider nominal and unplanned load cases.

2. Nominally, fluctuations in g loads will vary between +0.1 and –0.1g.

3. Occasionally, aborting the maneuver will result in loads reaching the nominal pull out condition within 5 seconds.

2.1.2.3 Anchored

Anchored equipment may be subjected to inadvertent contact loads. These loads can exceed 'hard landing case' loads locally.

Equipment design should use the case of 180# mass impacting the structure at 2 feet per second as worse case.

Additionally, inadvertent contact such as 'kick loads' may impart up to 125# over a 2" radius.

2.2 Aircraft Loading

Hardware proposed for flight on the KC-135 must take into consideration provisions for safe and efficient aircraft loading operations. Researcher hardware and proposed ground loading operations must comply with the following requirements:

1. All hardware must be designed to fit through the cargo door and into the test cabin with enough clearance to avoid the risk of damaging the aircraft structure.

2. A forklift is available at Ellington Field for lifting hardware up to the cargo door. This is typically done through utilization of the lifting pallet. A High Lift truck is also available to load equipment into the aircraft.

3. Handles and/or lifting bars must be implemented in the hardware design the proposed loading method involves human manipulation. There must be enough handles available so that any one person carrying the hardware does not lift more than 50 pounds.

4. For heavier assemblies, pneumatic casters, 6 inches in diameter or more, are recommended for hardware loading operations both on the ground and in the aircraft test cabin. Caster loads must not exceed 350 lbs/wheel. Casters may be removed from the hardware and taken off of the aircraft before flight.

5. Hardware base plates with an aircraft floor footprint greater than 1.5 ft^2 must not exceed 1600 lbs/ft^2 of floor loading during ground loading operations.

6. Hardware base plates with an aircraft floor footprint of less than 1.5 ft^2 must not exceed 350 lbs/wheel.

7. If allowable floor load must be exceeded, proper floor shoring procedures must be integrated with ground loading operations. All shoring procedures must be designed and implemented through the RGO.

2.3 Pressure/Vacuum System Requirements

All pressure/vacuum systems proposed for flight and/or ground use must comply with JSC Handbook (JHB-1710.13B).

Note

Pressure system is defined as *equipment used, in-flight or on the ground, to contain gas and/or liquid above or below ambient pressure*.

2.3.1 Classification Requirements

All pressure systems proposed for flight and/or ground support must fall into one of the five categories listed. Review the category descriptions to determine which category best describes the experiment's pressure system.

Category A

1. **Level 1:** These pressure systems conform to consensus codes and standards American Society of Mechanical Engineers (ASME), Department of Transportation (DOT), ANSI, etc. and may or may not have a code stamp. Non-stamped pressure systems are termed "code equivalent." Pressure systems are automatically categorized as a *Category A system* if pressures of 150 psig or greater exist in the system, and/or the system contains a toxic, corrosive, explosive, and/or flammable fluid.

2. **Level 2:** These pressure systems, because of pressure requirements, fabrication techniques, or material selection, do not fall within the scope of the applicable codes and standards, yet are designed in accordance with code formulas, documented stress values, and code safety factors. Pressure systems are automatically categorized as a *Category A system* if pressures of 150 psig or greater exist in the system, and/or the system contains a toxic, corrosive, explosive, and/or flammable fluid.

Category B

Category B is defined as Flight or Flight-Like Experimental Pressure Vessels/Systems. Typically, these types of systems have one or more components that are not directly compliant with ASME Codes or other equivalent pressure codes, and are therefore not classified as "Category A" systems.

The majority of the experimental hardware expected to be flown aboard the KC-135 Reduced Gravity Program is expected to be Category B.

Category C

Category C pressure systems have a combination of pressure contained volume and service fluid such that the maximum potential energy, if released, would not cause serious injury to personnel or significant damage to facilities.

Category D

Category D pressure systems are isolated, protected, contained, or restrained in such a manner that the maximum catastrophic failure would not be harmful to personnel, facilities, or equipment.

Category E

Category E pressure systems are inherently low in energy or possess a national record of operation without serious incident:

1. Water systems (150 psig or less and at 110°F or less)
2. Commercially manufactured heating, ventilation and air conditioning systems used expressly for their intended purpose.
3. Commercially manufactured refrigerators and freezers used expressly for their intended purpose.

2.3.2 Pressure System Design Requirements

All pressure systems proposed for flight and/or ground support must comply with the following design requirements. Be aware that the aircraft is pressurized at roughly 5000 to 8000 ft. pressure altitude during nominal flight. Design calculations for flight hardware should assume the worst-case scenario (i.e., rapid cabin decompression at the peak flight altitude) and allow factors of safety to be sufficient if the cabin pressure rapidly falls to 36,000 ft. pressure altitude. Please note that experimental hardware requiring deviation from accepted standards for mission specific purposes will be classified as Category B.

2.3.2.1 Operation and Configuration Control Plan (OCCP) Requests

An OCCP is a written assessment stating that flight or flight-like experimental pressure vessels/systems are safe for pressurization on JSC property. These unique pressure systems are referred to as "Category B" systems in JHB 1710.13B. Flight and flight-like pressure systems typically have one or more components that are not directly compliant with ASME Codes or other equivalent pressure codes, and therefore are not classified as "Category A" systems. Safety assessment of all JSC Category B systems is the

responsibility of the Materials and Process Technology Branch. Safety assessment of all other JSC pressure systems is the responsibility of the Pressure Systems Manager's Office (PSMO) within the Safety, Reliability, and Quality Assurance (SR&QA) organization.

An OCCP is required anytime a Category B system will be pressurized on JSC property. Pressurizations may include proof pressure tests, leak tests, functionality tests, charging processes, etc. OCCPs typically apply only to the actual flight or flight-like system. Therefore, the safety of any facility pressure system or ground support equipment to be mated to the Category B system shall be assessed by the PSMO.

Data and description should be submitted to the Materials and Process Technology Branch at least 4 weeks prior to flight. A guideline questionnaire is available (OCCP Request Questionnaire).

Category A Design Requirements

A maximum allowable working pressure (MAWP) must be designated for all pressure systems. Systems must be designed so that they never exceed this pressure under normal operating procedures. The system MAWP should not exceed the manufacturer specified MAWP of any individual component or line.

All hardware must be designed to satisfy a factor of safety of no less than 4.0 when MAWP is compared to material ultimate strengths, and no less than 2.0 when MAWP is compared to material yield strengths. All design calculations must be documented. Lower factors of safety may be used only with the approval of the JSC Pressure System. See the example equation below:

$$\text{Factor of Safety} = \frac{\sigma_{ultimate}(psi)}{\sigma_{MAWP}(psi)} \geq 4$$

All mobile/portable pressure and vacuum vessels that are used on the KC-135 and at Ellington Field shall be designed to address the requirements of Code of Federal Regulations (CFR) 49 or Section VIII of the ASME Boiler and Pressure Vessel Code. Any mobile/portable pressure vessels that are to leave JSC property shall be designed according to the requirements stated in CFR 49.

At a minimum, all pressure systems must be designed for the most severe condition of coincident pressure and temperature expected in operation. MAWP values should not be below this pressure. Also consider the following in determining a pressure system design:

1. Weight of the pressure system
2. Static reactions from weight of attached equipment
3. Cyclic and dynamic reactions caused by pressure or thermal variations, flow-induced vibrations, or attached equipment and mechanical loadings
4. Impact reactions such as those due to fluid shock
5. Temperature gradients and thermal expansion

Use materials that possess properly documented physical properties (i.e., strength, corrosion resistance, thermal expansion coefficients, etc.) by industry standard sources (i.e., Military Handbook 5). Consider the properties of a material carefully before utilizing it in a pressure system design.

The temperature used in the design of the pressure system shall not be less than the mean metal temperature (through the thickness) expected under operating conditions.

All Category A pressure systems shall be equipped with properly sized pressure relief devices. They shall be set to function at a maximum of 10 percent above the MAWP to prevent over-pressurization and possible catastrophic explosion due to component failure (failed regulator, runaway heater, etc.), ambient temperature influences, rapid cabin depressurization/over-pressurization, and/or external sources of heat (i.e., fire). These devices shall be:

1. Sized to prevent pressure from rising more than 10 percent above MAWP
2. Properly calibrated to certify settings and function
3. Selected on the basis of their intended service
4. Installed on the pressure system in such a way that they are readily accessible for inspection

All welds in a pressure system must be designed in accordance with the ANSI Document B31 and/or the ASME Boiler and Pressure Vessel Code, as applicable. Complete drawings of the welded assembly shall be generated using weld symbols that meet the requirements of the American Welding Society Document A2.4.

All piping systems must have adequate structural support to prevent the development of excessive piping stresses, leakage at joints, excessive loads on connected equipment, and resonance due to flow.

Gauges shall be sized to indicate a minimum of 150 percent to a maximum of 200 percent of the pressure system's MAWP for all pressure gauges incorporating a mechanical, dial indicating, bourdon tube, bellows or diaphragm type mechanism. Gauges must have a pressure relief mechanism internal to the gauge and must be properly calibrated before use.

Category B Design Requirements

Category B pressure systems requirements are generally user defined by mission parameters. These requirements are concurred with or amended, and a safety evaluation is performed by the Materials and Process Technology Branch.

This systems requirements approval process is specifically defined as safe for intended operation and is documented in an Operational and Configuration Control Plan. The OCCP is generated by the Materials and Process Technology Branch from user supplied data via Suggested Data for Operational and Configuration Control Plan Requests.

It is highly recommended to contact and involve the Materials and Process Technology Branch as early as possible in the design phase of the experiment.

Category C Design Requirements

Category C pressure systems are to be designed using good engineering practices. A MAWP must be designated for all Category C pressure systems. Systems should be designed to never exceed this pressure under normal operating procedures. The system MAWP should not exceed the manufacturer specified MAWP of any individual component or line. Professionally calibrated pressure relief valves and gauges are required on all Category C pressure systems. All hardware must be designed to satisfy a safety factor of no less than 4.0 when MAWP is compared to material ultimate strengths, and no less than 2.0 when MAWP is compared to material yield strengths. All design calculations must be documented. Lower safety factors may be used only with the approval the JSC Pressure System. See the example equation below:

$$\text{Pressure Vessel Factor of Safety} = \frac{\sigma_{ultimate}(psi)}{\sigma_{MAWP}(psi)} \geq 4$$

Category D Design Requirements

Category D pressure systems are to be designed using good engineering practices. A MAWP must be designated for all Category D pressure systems. Systems should be designed to never exceed this pressure under normal operating procedures. The system MAWP should not exceed the manufacturer specified MAWP of any individual component or line. They shall be isolated, protected, constrained, or restrained in such a manner so that catastrophic failure would not be harmful to personnel, facilities, or equipment. Professionally calibrated pressure relief valves and gauges are required on all Category D pressure systems. Category D pressure system housings must be designed to satisfy a safety factor of no less than 4 in the event of being exposed to 1.25 times the MAWP of the system it is containing. Housing design calculations must be documented. See the example equation below:

$$\text{Housing Factor of Safety} = \frac{\sigma_{ultimate}(psi)}{1.25\sigma_{MAWP}(psi)} \geq 4$$

Category E Design Requirements

Category E pressure systems shall be designed and installed using industry accepted engineering and fabrication practices.

2.3.3 Pressure System Test and Inspection Requirements

All pressure systems must comply with the test and inspection criteria listed below. Understand that all pressure systems (gauge calibration tags, relief valve tags, etc.) will be inspected and expected to operate at the Test Readiness Review (TRR). Have all pressure system documents readily available at the TRR. All pressure systems, regardless of classification, past flight history, and configuration, must be tested and inspected in their current configuration before each visit to Ellington Field. ASME, ANSI, and DOT components need not be tested if their certification tag is visible and current.

Category A Test and Inspection Requirements

Pressure systems must be proof pressure tested by qualified pressure systems specialists (i.e., certified technician, professional mechanical engineer, etc.). This can be accomplished through hydrostatic tests (i.e., pressurize system using water) up to 150 percent MAWP, or pneumostatic tests (i.e., pressurize system using gas) up to 125 percent MAWP. Hydrostatic testing is the preferred method. Proof pressure testing can be performed on the entire pressure system assembly or on each individual component, piping included. Document the inspection by including a brief test description, test date, technician/engineer involved (with signature), test procedure, and results. Remember to tag all equipment that has been calibrated and/or inspected with

pertinent test information such as calibration dates, type of test (hydrostatic, pneumostatic), relief valve setting, etc. Professionally tagged ASME, DOT, and/or ANSI pressure vessels need not be pressure tested.

All relief valves must be initially tested and tagged by qualified pressure system specialists (i.e., certified technician, professional engineer, etc.) to verify relief valves have been tested and set to operate at proper pressure levels. Relief valves built into control devices (i.e., regulator relief valves) do not require certification when the control device and associated piping is adequately protected from over-pressurization by design of other relief devices. All gauges must be properly calibrated and tagged with pertinent inspection information by qualified pressure system specialists (i.e., certified technicians, professional engineers, etc.). A technical inspection and system operation test will be performed on all Category A pressure/vacuum systems at the TRR. Have all pressure/vacuum system documents readily available at the TRR. Have all gauges and pressure relief valves calibrated, tested, and tagged before arriving at the TRR to expedite the certification process.

Category B Test and Inspection Requirements

Category B pressure systems do not fall within the scope of this document, and do not apply to KC-135 research equipment.

Category C Test and Inspection Requirements

All Category C pressure/vacuum systems must meet the same Test and Inspection Requirements as Category A pressure systems (see Category A Test and Inspection Requirements).

Category D Test and Inspection Requirements

A technical inspection and system operation test will be performed on all Category D pressure/vacuum systems at the TRR. Have all pressure/vacuum system documents, housing design calculations, and component calibration tags readily available at the TRR.

Category E Test and Inspection Requirements

A technical inspection and system operation test will be performed on all Category E pressure/vacuum systems at the TRR . Have all pressure system documents readily available at the TRR.

2.4 Electrical

All electrical wiring and interconnect cabling must be fabricated and installed in accordance with the current versions of the JPG-1700.1, JSC Safety and Health Handbook and the National Electrical Code.

Each experiment must have emergency shutdown capabilities. The preferred shutdown method is a single "kill switch" in an easily accessible location. If an experiment requires multiple "kill switches," they should be co-located in one area of the experiment. This

"kill" switch must de-energize all components in a system to a safe state, including hardware powered by auxiliary sources or an Uninterruptible Power Supply (UPS). Researchers should be prepared to demonstrate their experiment's emergency shutdown capability at the TRR.

In the event of electrical power loss (expected or unexpected), all experiments must fail to a safe configuration. There will be a brief interruption of electrical power during engine startup and momentary interruptions of electrical power may occur during flight. Although infrequent, brief power interruptions may disrupt certain sensitive instruments. Test equipment should incorporate protection devices (such as a UPS) to prevent data loss.

All electrical experiments must meet requirements for electro-magnetic compatibility (EMC) and susceptibility that preclude interference with an aircraft.

Experiments that require aircraft power must provide an electrical cable to reach a power distribution panel. This cable will be referred to as a "power cord" for the remainder of this document. All power cords should be 20 feet in length and have a descriptive tag secured to the end. The tag will clearly list the voltage and maximum current required (not maximum current available) from the aircraft outlet. Appropriately rated extension cords may be used as power cords.

Typically, an experiment platform will include a power-strip device to eliminate multiple power cords from the platform. When a power-strip is used, the combined current of all devices shall not exceed the capacity of the aircraft source outlet nor the power strip. Multiple power cords may be used on an experiment when load balancing is desired.

All experiment wiring, including power cords, must be adequately restrained and clamped. Normal aircraft vibration, high humidity, handling, and higher than one-g loads should be considered in connector and wiring selection. All exposed power leads and electrical contacts must be covered to protect personnel as well as the equipment itself. Electrical insulation should be protected against abrasion and chaffing which could expose bare contacts. Experiments must be adequately grounded to prevent electrical shock.

Each subsystem of an experiment's electrical system should be labeled. Each cable, connection and component should have a unique identifier that is clearly visible. High-voltage devices must be marked with warning labels.

In addition to existing aircraft circuit protection, each experiment must be self-protected with an incorporated circuit breaker or other current-limiting device. Though not yet required, it is strongly recommended that each electrical component have a dedicated current-limiting device as well. The limiting value of each device should be carefully chosen with the maximum current of the protected components in mind. As a minimum, 115 Volt Alternating Current systems should be protected with an appropriately rated surge protector.

When selecting circuit breaker values, the sum of the *maximum* device currents cannot exceed the rated current of the power source (or circuit breaker value). Ideally, each

circuit should be designed so that the total *nominal* current of all devices does not exceed 80 percent of the rated supply current. Experimenters must use wire sizes and circuit breakers in accordance with Table 2.

All batteries used must be of the dry cell or gel-cell type. Liquid electrolyte batteries are not allowed on the aircraft.

Sizing of electrical wiring is critical. All experiment cables, including power cords, must be of the appropriate size (or gauge) for the intended current draw across the wire. The NASA RGO requires all experiments to comply with the wire sizing guidelines of MIL-PRF-6106K and Society of Automotive Engineers (SAE) AS50881 (which replaces MIL-W-5088L). A summary of those guidelines is provided in Table 2.

Maximum Current	Minimum Wire Gauge
5 A	18
10 A	16
15 A	14
20 A	12
25 A	10
30 A	8
50 A	4

Table 2. Minimum Wire Gauges for Reference Only

The insulation of each wire must clearly show a manufacturer printed wire gauge label. All wires should be made of copper and have a wire temperature rating of at least 60°C. Higher rated wire such as 105°C is strongly encouraged.

The minimum wire size guidelines have been created using mathematical formulas from SAE document AS50881 (which has replaced MIL-W-5088L). The calculations assume the worst-case (most conservative) operating conditions for electrical wire with a temperature rating of 60°C. Experimenters are encouraged to use wire with greater temperature ratings; however, the maximum current ratings from Table 3 must be followed.

Figure 5. Picture of Free-Float Experiment

2.5 Free Float

The test package can be allowed to free-float inside the cabin to prevent contact with the walls, ceiling, or floor of the aircraft, if required. The maximum allowable free-float package weight is approximately 400 lbs.

If an umbilical is used between the floating package and tied-down support equipment, it must be at least 20 feet long to allow the floating package to freely drift.

Handles, the length of the longitudinal axis of the package in its floating configuration, should be mounted using 1-inch tubing near the top and bottom of the package.

Provisions to support take off/landing loads must be provided. Provisions for securing experiment during zero-g (contingency) should be provided.

2.6 Overboard Vent

The overboard vent system is a passive system driven by the pressure differential between the cabin pressure and outside air pressure. Where no pressure differential exists, no flow will occur (i.e., ground level to 8,000 feet). It is required that the chemical composition and quantity of the vented gas be entirely known and completely understood by the experimenter and documented. It is the responsibility of the experimenter to inform the RGO concerning all possible hazards associated with the vent gas, including (but not limited to) the possibility of freeze-up, blockage, ignition, corrosion, and chemical reaction with other agents that could be introduced by another experiment.

The manifold fittings on the multi-user vent line are female (internally threaded) Army/Navy (AN) 12 fittings (3/4"); therefore, researchers need to supply a male AN 12

fitting for the research equipment (see AOD 33898, Interface Control Document NASA 931 KC135A). Researchers must also supply flex line of adequate diameter and length (not less than 20 feet) to provide the required flow rate.

The dedicated vent line has a male 1-1/4" National Pipe Thread (NPT) threaded fitting. To attach directly, experimenters should fit their equipment with a 1-1/4" female NPT thread. The RGO also has the ability to provide an AN 20 male fitting, an AN 16 male fitting, and a 1" NPT male fitting on this dedicated vent line. The researcher is responsible for providing the matching female fitting on the test equipment.

The multi-user vent line will be employed for standard venting operations. The RGO shall be informed and documented if the dedicated vent line is required for an experiment.

Note

Since only one experiment per flight can hook-up to the dedicated line, this request must be clearly stated in the Overboard Vent Requirements section to avoid scheduling conflicts with other researchers requesting its use.

Location	Max Flow (SCFM) 36,000'	Min Flow (SCFM) 26,000'
Fwd Manifold	64 (total*)	61 (total*)
Aft Manifold	72 (total*)	69 (total*)
Dedicated Line	75	72

Table 3. Overboard Vent Flow Rates for Reference Only

*total refers to a combination of all experiment flows at that location including all flows introduced upstream at the forward manifold.

Note

These rates apply at the manifold/fitting only. Line losses in researcher equipment must be considered to determine flow rate at researcher's termination point.

A complete study of the volumetric flow rates through the overboard vent system has been conducted and a copy is available through the RGO. See to AOD 33898, Interface Control Document NASA 931 KC135A.

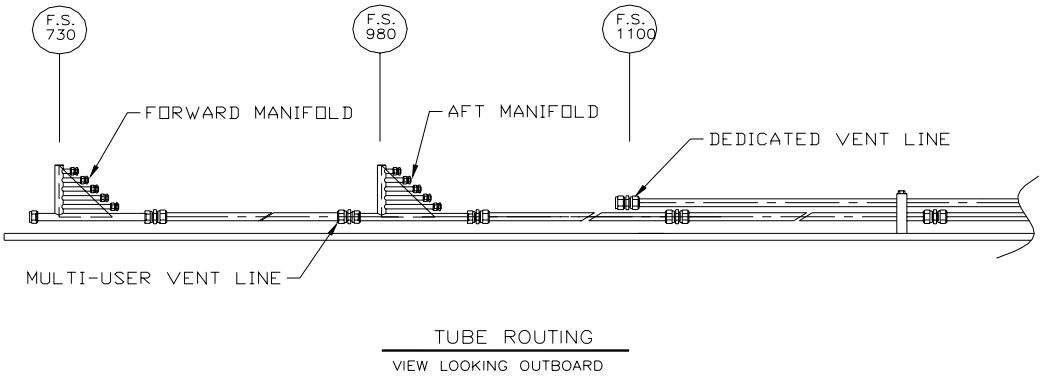

Figure 6. Overboard Vent Line for Reference Only

The cabin volume is = 4346 ft^3. The cabin air exchange rate is 1 cabin volume per 3 minutes.

2.7 Laser

The following requirements are to be used as guidelines for the use of all classes of lasers proposed for flight on the KC-135. The JSC Radiation Safety Committee has adopted the latest revision of ANSI Z136.1 (American National Standard for Safe Use of Lasers) as the guide for approving lasers and/or laser systems proposed for use in facilities and aircraft under the administrative control of JSC.

2.7.1 Class Designation

All lasers or laser systems must be categorized in a class according to the class definitions listed below. It is recommended that the minimum class laser be used that will accomplish the payload objective. Class definitions are as follows:

1. **Class 1:** Lasers or laser systems that do not, under normal operating conditions, pose any hazard whatsoever.

2. **Class 2a:** Low-power visible lasers or laser systems that are not intended for prolonged viewing, and under normal operating conditions will not produce a hazard if the beam is viewed directly for periods not exceeding 1000 seconds.

3. **Class 2:** Low-power visible lasers or laser systems which, because of the normal human aversion response (i.e., blinking, eye movement, etc.), do not normally present a hazard, but may present some potential for hazard if viewed directly for extended periods of time.

4. **Class 3a:** Lasers or laser systems having CAUTION labels that normally would not injure the eye if viewed for only momentary periods (within the aversion period) with the unaided eye, but may present greater hazard if viewed using collecting optics. Lasers that have DANGER labels and are capable of exceeding permissible exposure levels for the eye in 0.25s should also be considered as a part of this class.

5. **Class 3b:** Lasers or laser systems that can produce a hazard if viewed directly. This includes intra-beam viewing of specular reflections.

6. **Class 4:** Lasers or laser systems that produce a hazard not only from direct or specular reflections, but can also produce hazardous diffuse reflections. Such lasers may also induce skin hazards as well as fire hazards.

2.7.2 Protective Housings

A suitable, protective housing shall be provided for all classes of lasers or laser systems. These housings or enclosures shall have interlock switches to prevent operation of the laser when the housing or enclosure is removed.

2.7.3 Equipment Labels

All lasers or laser systems shall have appropriate warning labels with an appropriate cautionary statement. The label shall be affixed to a conspicuous place on the laser housing or control panel. Such labels should be placed on both the housing and control panel if separated by more than 3 feet or by abrupt change in normal viewing direction.

2.7.4 Viewing Portals and Collecting Optics

Viewing portals and collecting optics (lenses, telescopes, microscopes, etc.), intended for viewing use on all lasers, must incorporate a means (interlocks, filters, attenuators, etc.) of maintaining a level of laser radiation at or below the Maximum Permissible Exposure limit at all times.

2.8 Emergency Procedures

Emergency procedures for experiments must be meticulously derived and easy to accomplish. Researchers must be comprehensively knowledgeable of their experiment/hardware and be ready at all times to initiate these procedures without delay. All equipment must be designed so that in the event of test cabin power loss, rapid cabin depressurization, fluid leaks, fire, etc., there will be no chance of inducing another hazardous situation. **Emergency procedures must be placarded on equipment, using easy to understand instructions placed at a highly visible location**.

In the event of a researcher becoming incapacitated, a KC-135 Test Director should be able to safely and efficiently initiate emergency procedures to fail-safe an experiment. A single action "kill switch" is the preferred means of securing research equipment in the event of an emergency.

2.9 Hazardous Materials

If such materials are required for a test, proper containment must be provided.

Note

Early contact with the RGO and the JSC Safety Office for discussions on proper use and containment of proposed hazardous materials may prevent delays in getting approval for the use of such materials. If such materials are necessary, provisions for dumping and purging in flight may be required.

A current Material Safety Data Sheet (MSDS) must be supplied for each hazardous material.

For hazard material release calculation, the cabin volume is ≈4346 cubic feet. The cabin air exchange rate is 1 cabin volume per 3 minutes.

Note

Please address local concentration of potential released agents, as well as total aircraft volume.

2.10 Tools

Generally speaking, no user tools or loose items are allowed on the aircraft at any time.

All tools will be stored in a proper container such as a tool bag or box. Each tool shall be marked to indicate its owner. Each container will have an inventory sheet listing all tools.

Tools needed for flight shall be included during the TRR briefing for approval, and a copy of the tool inventory must be provided to a Test Director prior to each flight. Those tools exposed on research hardware will be tethered to the equipment.

An abundance of tools are available for researcher use through the RGO. Requests to borrow tools should be made to the RGO only.

A Test Director must approve changes to the tool list prior to flight.

2.11 Containment of Loose Parts and Equipment (Ground and Flight Ops)

All loose parts and equipment will be maintained in a proper container (such as a tool bag or box) during flight and on ground. These items must be marked to indicate their owner.

Each container will have an inventory sheet listing all items and shall be included during the TRR briefing for approval Any loose item that cannot be contained during flight will be tethered.

Note

If any loose item is lost during flight, a Test Director must be notified immediately so that the experiment can be put into a safe mode and a search begun to locate the missing item.

2.12 Liquid Containment

Liquids approved for flight on the KC-135 must be contained in a system that is structurally sound to withstand g-loads specified in section 2.1, and inadvertent contact loads.

A MSDS form must be submitted in the Test Equipment Data Package for all fluids other than water. Avoid the use of toxic, corrosive, and explosive fluids.

Note

Secondary and tertiary containment must be sufficient to contain total sytsem volume. Secondary and tertiary levels may not be considered for nominal operational containment.

Hardware used to contain liquid must be designed with suitable provisions for fluid control to ensure a leak free system during nominal ground and flight operations. In the event of aircraft power loss, all hardware must fail to a mode allowing for sound fluid containment.

Non hazardous liquids, in free volume greater than 6 oz., should be double contained. Hazardous liquids must be triply contained.

2.13 EMI (Electromagnetic Interference)/RFI Checks

All electrical experiments should meet requirements for EMC and susceptibility relating to interfering with other experiments or aircraft instrumentation systems.

Note

This may occur during flight operations. Experiments may also be powered down to help troubleshoot an EMI problem.

2.14 Cleaning Equipment for Zero-G Flight

Shavings, splinters, dirt, and dust pose very different problems in a zero-g environment than they do in a one-g environment. Small particles will become airborne in zero-g and pose a health hazard (for eyes, ingestion, inhalation, etc.).

All experimental hardware must be thoroughly cleaned prior to its loading on the KC-135. Hardware should be vacuumed, and/or blown out, removing material shavings created during the hardware assembly phase in all attitudes and orientations.

Equipment repairs performed onboard the aircraft (i.e., drilling, sanding, filing, or any other operation that may produce shavings or splinters) must be approved by a Test Director.

A Test Director will inspect the research hardware upon completion.

2.15 Touch Temperature for Research Hardware

Research hardware that contains heat producing devices shall maintain an inadvertent touch temperature of no greater than 122°F (50°C) on any potentially expose surface or item. Continuous contact must not exceed 113°F.

2.16 KC-135 Noise Levels

Sound levels greater than 140 dB generated by experiment hardware are not permitted for any duration of exposure. Occupational Safety and Health Administration (OSHA) noise exposure limits are given below for inflight and ground ops:

Duration (hrs)	dBA
8	90
6	92
4	95
3	97
2	100
1.5	102
1.0	105
0.5	110
0.25	115

2.17 Miscellaneous Guidelines

The KC-135 flight environment is one of the most unique flying experiences in the world. It is very difficult to describe the physical, zero-g sensation and even more difficult to model the operation of equipment during various g-phases of a parabola through tests on the ground. As a result of experiencing thousands of parabolas, KC-135 flight crew members have formulated the following guidelines to help make research on the KC-135 effective, enjoyable, and most importantly, safe.

1. Pad all hard and sharp edges that could conceivably be accessed by nominal or inadvertent operations.

2. If the use of sharp objects is absolutely necessary, meticulous containment is required.

3. Any frangible items, glass, cathode ray tubes, gauges, windows, or any other object that is susceptible to shattering must be entirely contained and unexposed to the test cabin.

4. Oil lubricated pumps are not allowed on the KC-135.

5. Duct tape used to attach miscellaneous articles (i.e., wire bundles, clip boards, etc.) to any part of the aircraft must be provided by the RGO.

6. Hook and loop fasteners (Velcro® may be used to temporarily mount small equipment items (i.e., clipboards, keyboards, etc.) to the aircraft and/or hardware frame during the parabola phase of the flight.

Note

The adhesive side of a Velcro® strip must not be directly attached to any part of the aircraft.

7. Have contingency procedures ready for the operation and/or orderly shut down of equipment in the event of one or more researchers becoming incapacitated due to motion sickness.

8. Strategically locate experiment operators around the perimeter of an experiment. Do not over-crowd one specific area.

9. Keep controls and emergency shut down switches, valves, etc. in one localized area.

10. Foot straps may be provided by the RGO to help lightly anchor personnel to the floor of the aircraft test cabin upon request.

11. Inventory and provide proper containment for all articles (i.e., tools, cameras, disks, everything) taken aboard the aircraft. This inventory list must be submitted to a Test Director before and after every flight.

12. The KC-135 Test Directors will be directly involved with any free-floating of an experiment.

13. Personal camcorders and cameras are generally allowed on the KC-135.

Recommendations

Ambient Noise levels aboard NASA's KC-135 exceed OSHA exposure limits if it is assumed that a typical KC-135 flight lasts for more than one hour. To avoid permanent hearing loss for fliers, it is recommended that hearing protection devices be used. This is especially important for individuals making frequent flights aboard the aircraft.

INDEX

aircraft floor footprint, 13
Aircraft Loading, 12
Aluminum floor spacers, 9
Any glass, 27
Cargo Strap Schematic, 10
Category A Design Requirements. See Pressure System Design Requirements
Category A Test and Inspection Requirements, 17
Category B Design Requirements. *See* Pressure System Design Requirements
Category B Test and Inspection Requirements, 18
Category C Design Requirements. *See* Pressure System Design Requirements
Category C Test and Inspection Requirements, 18
Category D Design Requirements. *See* Pressure System Design Requirements
Category D Test and Inspection Requirements, 18
Category E Design Requirements. See Pressure System Design Requirements
Category E Test and Inspection Requirements, 18
Class Designation. *See* Lasers
Classification Requirements, 13
Cleaning Equipment for Zero-G Flight, 26
Containment of Loose Parts and Equipment, 25
contingency procedures, 28
Electrical, 18, 19
electrical power during engine, 19
electrical power loss, 19
Ellington Field, 13, 15, 17
Emergency Procedures, 24
EMI/RFI Checks, 26
Equipment Labels. *See* Lasers
Floor Attachment Hardware, 8, 9
Flow Rates, 22
Foot straps, 28
forklift, 13
Free Body Diagrams, 8
Free Float, 21
G-Load Specifications, 8
Hazardous Materials, 25
High Lift truck, 13
JSC Safety and Health Handbook, 18
JSC Safety and Health Handbook, 6
KC-135, 8, 9, 12, 14, 15, 16, 18, 23, 24, 26, 27, 28
Laser, 23
Material yield strengths, 8
Miscellaneous Guidelines, 27
Oil lubricated pumps, 27
Overboard Vent, 21, 22, 23
Pad all hard and sharp edges, 27
Personal camcorders and cameras, 28
Pressure System Design Requirements, 14
Pressure System Test and Inspection Requirements, 17
Pressure/Vacuum System Requirements, 13
Protective Housings. *See* Lasers
Purpose, 6
Reduced Gravity Office, 7, 8, 20, 21, 22, 23, 25, 28
Scope, 6
Spacers, 9
Test Cabin Floor Schematic, 9
Test Design Requirements, 8
Test Equipment Data Package, 26
Test Equipment Structural Design Requirements, 8
Test Readiness Review, 7, 17, 18, 19
Touch Temperature for Research Hardware, 27
User Tools, 25
Velcro, 28
Viewing Portals and Collecting Optics. *See* Lasers
volumetric flow rates, 23