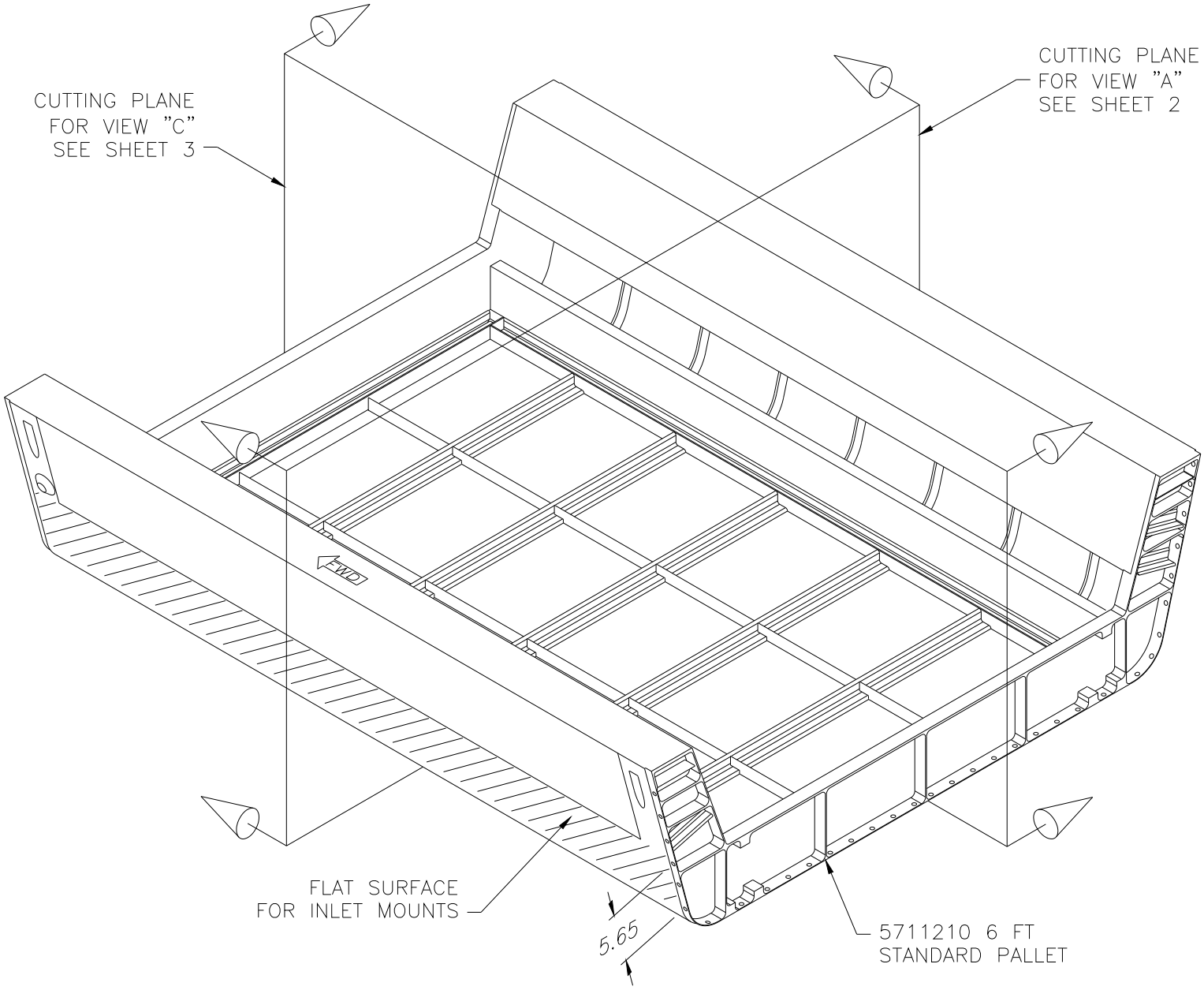

GENERAL ARRANGEMENT

ISO VIEW – NO SCALE

GENERAL ARRANGEMENT, 6 FT STANDARD PALLET
DWG No. 5711209, SHEET 1 OF 3

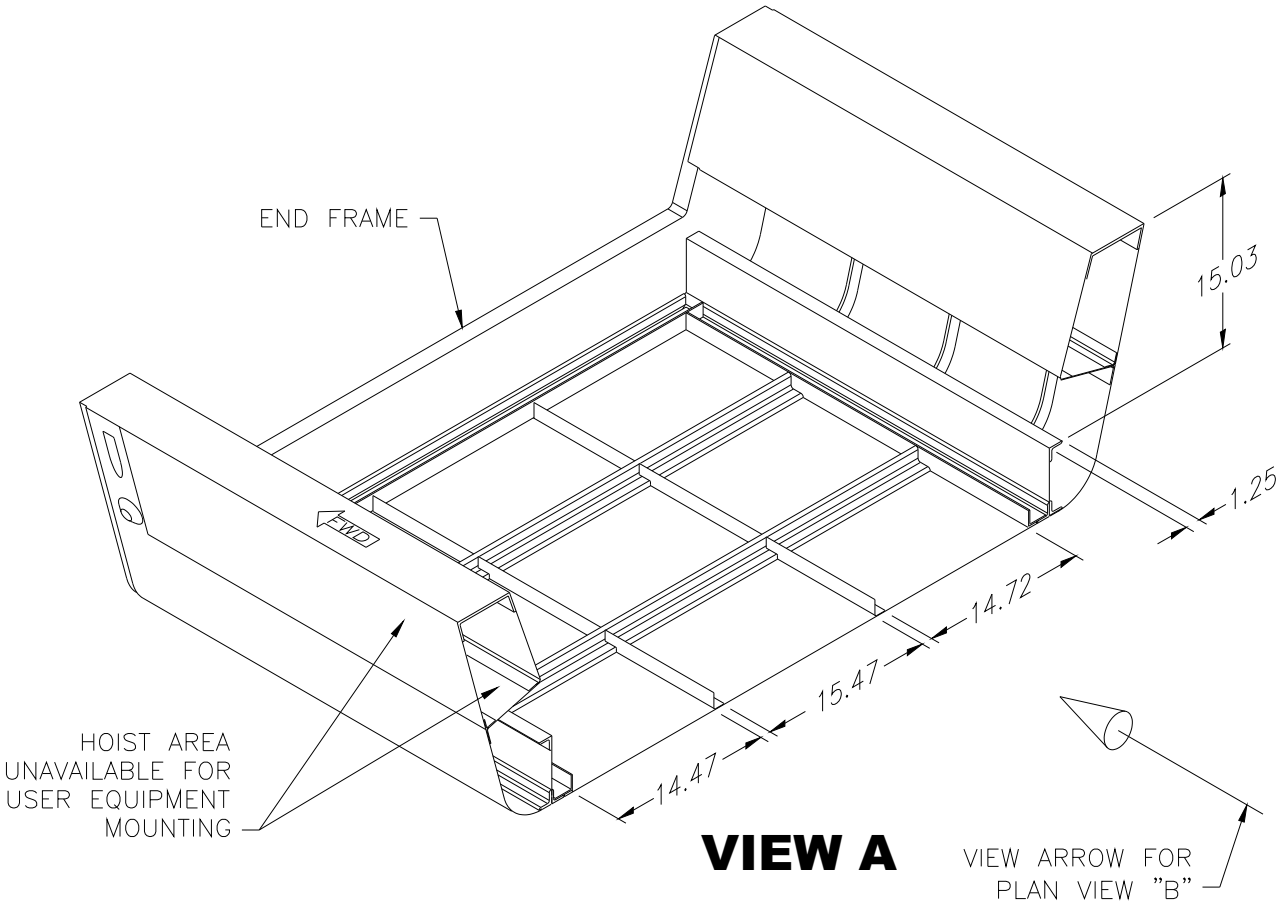

VIEW A

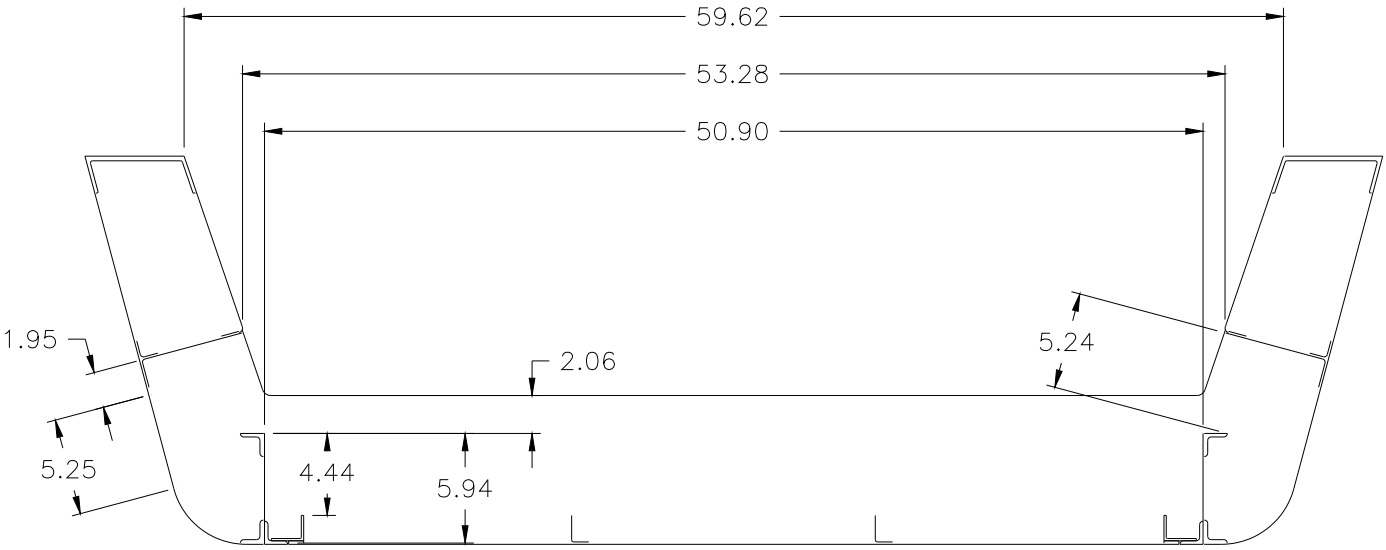

VIEW B

GENERAL ARRANGEMENT, 6 FT STANDARD PALLET
DWG No. 5711209, SHEET 2 OF 3

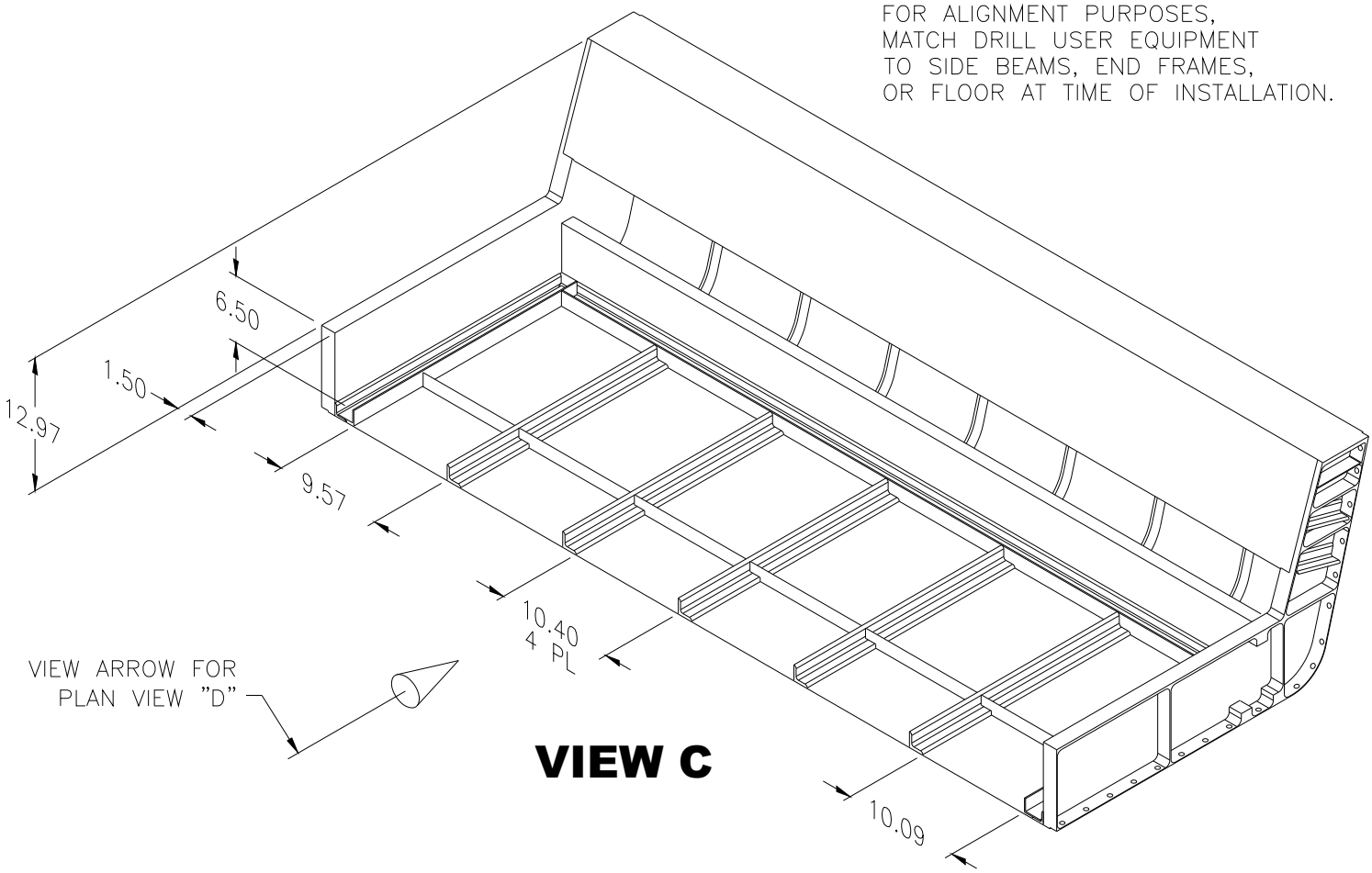

VIEW C

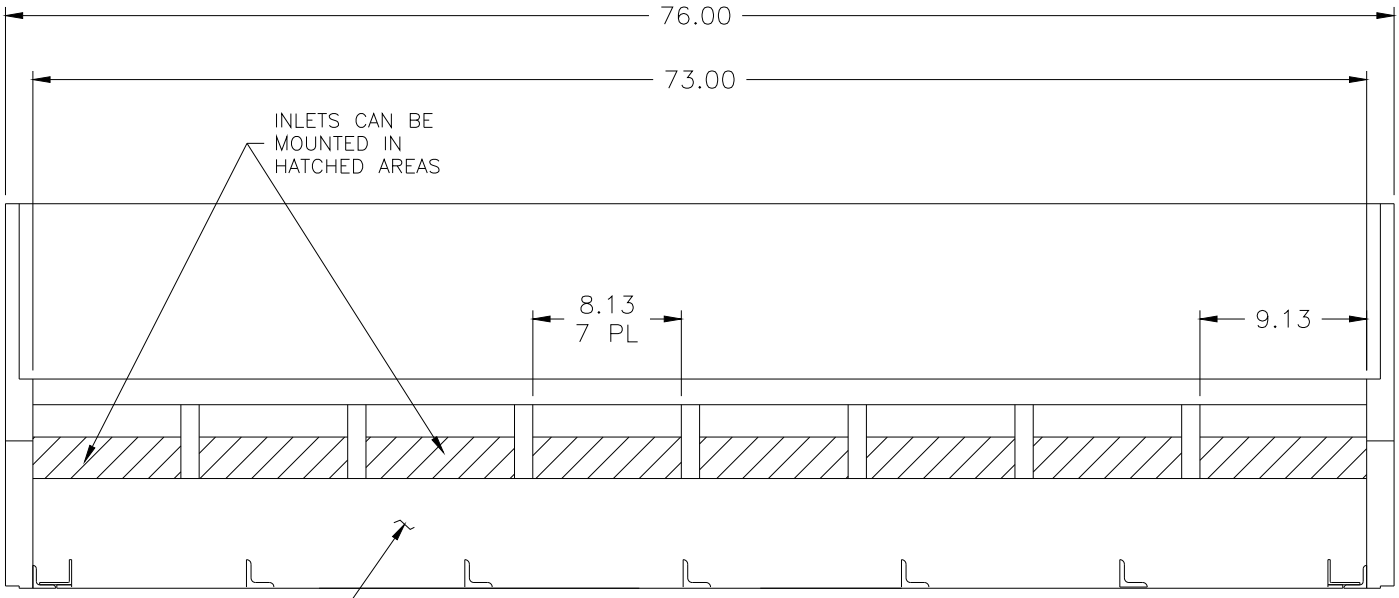

VIEW D

GENERAL ARRANGEMENT, 6 FT STANDARD PALLET
DWG No. 5711209, SHEET 3 OF 3