AOD 33890
Rev A

WB-57F Experimenter's Handbook

Aircraft Operations Division

November 2010

National Aeronautics and
Space Administration

Lyndon B. Johnson Space Center
Houston, Texas 77058

Verify that this is the correct version before use.

APPROVAL AUTHORITY

Original Signed By

Richard N. Clark
Chief, Aircraft Operations Division

CHANGE RECORD/LIST OF EFFECTED PAGES

Doc. Version	Date	Process Owner/Ext.	Description
Basic	Aug 2001	G. Ash/49651	Initial release.
Basic PCN 1	Feb 2002	G. Ash/49651	Change bar denotes changes on Page 18.
Rev A	Nov 2010	J. Alexander/49870	Major revision; document updated to reflect current procedures.

Page No.	Doc. Version	Page No.	Doc. Version
Cover	Rev A		
2 thru 86	Rev A		

TABLE OF CONTENTS

APPROVAL AUTHORITY **2**

CHANGE RECORD/LIST OF EFFECTED PAGES **3**

TABLE OF CONTENTS **4**

LIST OF FIGURES **8**

LIST OF TABLES **8**

1.0 INTRODUCTION **9**
1.1 Overview **9**
1.2 Purpose and Scope of Document **9**
1.3 References **9**
1.4 Acronyms and Abbreviations **10**

2.0 AIRCRAFT DESCRIPTION **13**
2.1 General **13**
2.2 Dimensions **14**
2.3 Performance (Altitude, Speed, Range, Endurance, Turn Performance) **15**
2.3.1 Airspeed 15
2.3.2 Turn Radius 15
2.3.3 Climb and Descent Rates 15
2.4 Payload Weights **16**
2.5 Operating Restrictions (Airfield, Meteorological, etc.) **20**
2.5.1 Altitude Limitations 20
2.5.2 Air Traffic Control Limitations 20
2.5.3 Low Visibility Limitations 20

3.0 ENVIRONMENT **20**
3.1 Pressure **20**
3.2 Temperature **20**
3.3 Load and Acceleration **21**
3.4 Airflow and Boundary Layer **21**
3.5 Stability/Attitude **21**
3.6 Vibration and Shock **21**
3.7 Radio Frequency and Electromagnetic Interference **22**
3.8 Radiation **22**

4.0 PAYLOAD ACCOMODATIONS **23**
4.1 Physical **23**
4.1.1 Locations and Dimensions 23
4.1.1.1 Pallets 24
4.1.1.2 Pressure Containers 25
4.1.1.3 Spear Pods 25
4.1.1.4 Superpods 26
4.1.1.5 Nose Cone 27
4.1.1.6 Aft Fuselage/Tail Cone 27
4.1.1.7 Wing Hatches 27

4.1.2 Mass and Moment Constraints 27
4.1.3 Cabin and Cargo Access Constraints 28
4.1.4 Mechanical Interfaces 28
4.1.4.1 Structural Attachments (Hard Points) 28
4.1.4.2 Racks 28
4.1.4.3 Pods 28
4.1.4.4 Equipment Bays 28
4.2 Electrical Power and Interface 28
4.2.1 Aircraft/Experiment Electrical Interface 29
4.2.2 Auxiliary Power Panels 33
4.3 Payload Control and Interface 36
4.4 Experimenter Ports (Viewports, Apertures, and Windows) 37
4.5 Probes, Venturis, and Inlets 37
4.6 Facility Instruments 37
4.6.1 Standard Aircraft Systems (Performance, Calibration) 37
4.6.2 Cameras and Video 37
4.7 Science Crew Complement 37

5.0 COMMUNICATIONS, NAVIGATION, AND DATA ACQUISITION, DISTRIBUTION AND DISPLAY 37
5.1 Voice and Data Communications 37
5.1.1 Voice Communications 37
5.1.2 INMARSAT 37
5.2 Antennas 37
5.3 Flight Management and Navigation Systems 38
5.4 Flight Parameter Data Recording 39
5.5 Data Acquisition 39
5.6 Data Distribution and Interface 39
5.7 Data Display 39
5.8 Time Information 40

6.0 PAYLOAD DESIGN PLANNING, ENGINEERING, AND INTEGRATION PROCESSES 40
6.1 Experiment Development and Planning 40
6.1.1 Airborne Science Flight Requests 40
6.1.2 Payload Information Form 41
6.1.3 Payload Data Package 41
6.1.4 Drawing and Other Technical Data 41
6.1.5 Hazards 42
6.1.6 Aircraft Personnel 42
6.2 Certifications, Reviews, and Approvals 42
6.3 Aircraft Integration 43
6.4 Schedules and Timelines 43
6.4.1 Arrival at Ellington Field 45
6.4.2 Departure from Ellington Field 45

7.0 PAYLOAD DESIGN AND FABRICATION REQUIREMENTS 45
7.1 Flight Safety 46
7.2 Mechanical Systems 46
7.2.1 Loads and Structures 46
7.2.1.1 Ultimate Load Factors 47
7.2.2 Inlet Systems 48
7.2.3 Fasteners 48
7.2.4 Welding 49
7.3 Electrical Systems 49
7.3.1 Wiring 49
7.3.2 Cabling 50
7.3.3 Connectors 50
7.3.4 Circuit Protection 50
7.3.5 Batteries and Uninterruptible Power Supplies 50
7.3.6 Motors and Pumps 50
7.3.7 Power Distribution 51
7.3.8 Electromagnetic Interference 51
7.4 Materials 51
7.4.1 Metallic 51
7.4.2 Non-Metallic 51
7.4.3 Hazardous Material 51
7.5 Pressure and Hydraulic Systems 52
7.5.1 Pressure/Vacuum Systems 52
7.5.2 Purge/Vent Systems 53
7.5.3 Cylinders 53
7.6 Thermal 54
7.6.1 Temperature Limits 54
7.6.2 Control 54
7.6.3 Heaters 54
7.6.4 Chillers 54
7.7 Hazards 54
7.7.1 Lasers 54
7.7.2 Gases 55
7.7.3 Cryogens 55
7.7.4 Radiation Sources 55
7.7.5 Other 55
7.8 Access, Egress, and Physical Integration 56

8.0 FLIGHT OPERATIONS 56
8.1 Operational Scenarios (Flight Hours and Duty Days) 56
8.2 In-flight Activities and Protocols 57
8.2.1 Post-Flight 57
8.3 Testing (TRRs) 57

8.4 Flight Safety 58
8.4.1 Access/Egress 58
8.4.2 Specialized Safety Equipment 58
8.4.3 Tool Control 58
8.4.4 Personnel Training and Certification 58
8.5 Field Deployments 58

9.0 GROUND OPERATIONS 61
9.1 Facilities 61
9.1.1 Building 994 Computer Network Access, Printers, and Phones 63
9.1.2 Payload Equipment and Material Storage 63
9.1.3 Shipping and Receiving 63
9.2 Ground Support Equipment 63
9.3 Tool Control 64
9.4 Access (Including Badging) 64
9.4.1 U.S. Citizens 65
9.4.2 Permanent Resident Aliens ("Green Card" Holders) 65
9.4.3 Foreign Nationals and Foreign Representatives 65
9.5 Safety 65

APPENDIX A – PAYLOAD INFORMATION FORM 67

APPENDIX B – PAYLOAD DATA PACKAGE REQUIREMENTS 68

APPENDIX C – RACK/MOUNTING LOCATIONS 77

APPENDIX D – DATA/NAVIGATION PARAMETERS 78

APPENDIX E – DETAILED SAFETY AND EMERGENCY PROCEDURES 82

LIST OF FIGURES

Figure 1. NASA WB-57F (N926NA) 13
Figure 2. NASA WB-57F (N928NA) 14
Figure 3. WB-57 Aircraft Dimensions 14
Figure 4. Nose Radome Loading Envelope 17
Figure 5. Spear Pod Forebody Loading Envelope 18
Figure 6. Superpod Forebody Loading Envelope 19
Figure 7. Typical WB-57 Payload Integration Locations 23
Figure 8. WB-57 3 Foot Pallet 24
Figure 9. 15 PSI Pressure Container in 3 Foot Pallet 25
Figure 10. WB-57 Spear Pod 26
Figure 11. WB-57 Superpod 26
Figure 12. WB-57 Nose Cone 27
Figure 13. Typical Experiment Interface Panel (EIP) 29
Figure 14. Experiment Control Panel 30
Figure 15. Power and Status Simplified Schematic 30
Figure 16. Pinout Receptacles J1 thru J5 (N926NA) 31
Figure 17. Pinout Receptacles J1 thru J5 (N928NA) 32
Figure 18. Pinout Receptacles J6 thru J10 33
Figure 19. Pinout Receptacles J11 and J12 33
Figure 20. Typical Auxiliary Power Panel (N926NA) 34
Figure 21. Typical Auxiliary Power Panel (N928NA) 35
Figure 22. Backseat – Right Side Console Configuration 36
Figure 23. Backseat – Forward Console Configuration 36
Figure 24. WB-57 Axis Configuration for Ultimate Loads 48
Figure 25. Domestic Deployment Sites 59
Figure 26. International Deployment Sites 60
Figure 27. Building 994 WB-57 Payload Laboratory 62
Figure 28. Building 994 High Bay Work Area 62
Figure 29. Building 994 Toolbox 64

LIST OF TABLES

Table 1. Performance and Capabilities 15
Table 2. WB-57 Radio Frequency Chart 22

1.0 INTRODUCTION

1.1 Overview

This experimenter's handbook presents information on the NASA WB-57F high altitude research aircraft in the standard format common to all NASA Airborne Science Program (ASP) platforms. Due to the common format, some sections applicable to other NASA ASP platforms have limited or no applicability to the WB-57.

This handbook should be used in conjunction with information available on the NASA WB-57 website: http://jsc-aircraft-ops.jsc.nasa.gov/WB57/index.html

1.2 Purpose and Scope of Document

This handbook is our attempt to give you the information necessary to make your work with us easier, safer, more efficient, and less expensive. We have outlined various categories of information that have been important and useful in the past. The procedures that we require prior to flight are necessary to ensure the safety of the aircraft, associated equipment, and all people involved. We will be happy to work with you to make your time with us as pleasant and productive as possible.

While every effort is made to keep this document as complete and up-to-date as possible, the WB-57 program is dynamic and changes occur frequently. Please check with the WB-57 Program Office to verify information, get more detailed information, or to ask questions. WB-57 Program Office contact information is available at the following link from the WB-57 website: http://jsc-aircraft-ops.jsc.nasa.gov/wb57/contact.html

The following definitions apply to the words "shall," "will," "should," and "may" found throughout this handbook:

Shall and **Will** – Indicates a mandatory requirement.

Should and **May** – Indicates an acceptable or suggested means of accomplishment.

1.3 References

American Welding Society (AWS) D17.1, Specification for Fusion Welding for Aerospace Applications

ANSI/AIAA S-081/A, Space Systems Composite Overwrapped Pressure Vessels

AOD Form 44A, Radio Frequency/Microwave Evacuation Data

AOD Form 44B, Laser Devise Use Request/Authorization

Federal Motor Vehicle Safety Standards (FMVSS) 304, Compressed Natural Gas Fuel Container Integrity

JPR 1710.13, Design, Inspection and Certification of Pressure Vessels and Pressurized Systems

JSC Procedural Requirement (JPR) 1700.1, JSC Safety and Health Handbook

NASA Drawing 8593003, Wire, Electric, Interconnection, and Hookup

National Fire Protection Association (NFPA) 52, Vehicular Fuel Systems Code

Society of Automotive Engineers (SAE) AS50881, Wiring Aerospace Vehicle

Technical Order (T.O.) 1-1A-14, Technical Manual, Installation and Repair Practices, Aircraft Electric and Electronic Wiring

1.4 Acronyms and Abbreviations

AR	Airworthiness Review
ADF	Automatic Direction Finder
AFSRB	Airworthiness and Flight Safety Review Board
AGL	Above Ground Level
AOD	Aircraft Operations Division
ASP	Airborne Science Program
ATM	Atmosphere
AWS	American Welding Society
CG	Center of Gravity
COPV	Composite Overwrapped Pressure Vessel
CRT	Cathode Ray Tube
CST	Central Standard Time
DME	Distance Measuring Equipment
DOT	Department of Transportation
E/D	Edge Distance
ECP	Experiment Control Panel
EFD	Ellington Field
EIP	Experiment Interface Panel
EMI	Electromagnetic Interference
FAA	Federal Aviation Administration
FMS	Flight Management System
FMVSS	Federal Motor Vehicle Safety Standards
FOD	Foreign Object Debris
FR	Flight Request

FRR	Flight Readiness Review
FS	Factor of Safety
ft-lb	foot-pounds
ft/min	feet per minute
g	gravity
GPS	Global Positioning System
GSE	Ground Support Equipment
HAZ	Heat Affected Zone
HAZMAT	Hazardous Material
IDAN	Intelligent Data Acquisition Node
$inch^3$	Cubic Inch
in-lb	inch-pounds
INS	Inertial Navigation System
JPR	JSC Procedural Requirement
JSC	Johnson Space Center
kHz	Kilohertz
KIAS	Knots Indicated Airspeed
KTAS	Knots True Airspeed
mg/Kg	Milligrams per Kilogram
mg/M3	Milligrams per Cubic Meter
MHz	Megahertz
MOP	Maximum Operating Pressure
MOU	Memorandum of Understanding
MSDS	Material Safety Data Sheet
NASA	National Aeronautics and Space Administration
N/A	Not Applicable
NFPA	National Fire Protection Association
NPT	National Pipe Thread
OCCP	Operation and Configuration Control Plan
ORR	Operational Readiness Review
OSHA	Occupation Safety and Health Administration

PDP	Payload Data Package
PE	Polyethylene
PIF	Payload Information Form
PPE	Personal Protective Equipment
ppm	Parts Per Million
psia	Pounds per Square Inch Absolute
psig	Pounds per Square Inch Gauge
PTS	Pointing and Tracking System
PVC	Polyvinyl Chloride
RAC	Risk Assessment Code
RF	Radio Frequency
SAE	Society of Automotive Engineers
SEO	Sensor Equipment Operator
SOFRS	Science Operations Flight Request System
SPDT	Single Pole, Double Throw
T.O.	Technical Order
TACAN	Tactical Air Control and Navigation
TAS	True Airspeed
TCAS	Traffic Alert and Collision Avoidance System
TLV	Threshold Limit Value
TRR	Test Readiness Review
UCT	Universal Coordinated Time
UHF	Ultra High Frequency
UPS	Uninterruptible Power Supply
Vac	Volts Alternating Current
Vdc	Volts Direct Current
VHF	Very High Frequency
VOR	VHF Omni Directional Radio Range
VPP	Voluntary Protection Program

2.0 AIRCRAFT DESCRIPTION

2.1 General

NASA Johnson Space Center (JSC), Aircraft Operations Division (AOD), operates two WB-57F aircraft (tail numbers N926NA and N928NA) out of Ellington Field (EFD) in Houston, Texas (see Figure 1 and Figure 2). These are the last two WB-57 aircraft flying in the world today. The WB-57F is a mid-wing, long-range aircraft capable of operation for extended periods of time from sea level to altitudes in excess of 60,000 feet. Flights above 50,000 feet ("high" flights) require the aircrew to wear full pressure suits. Two crewmembers are positioned at separate tandem stations in the forward section of the fuselage. The Pilot station contains all the essential equipment for flying the aircraft. The aft or Sensor Equipment Operator (SEO) station contains both navigational equipment and controls for the operation of the payloads and payload support systems located throughout the aircraft.

NOTE

N926NA and N928NA are not configured identically, although that is the long-term goal. Wherever possible, differences between the two aircraft will be specified in appropriate sections throughout this handbook.

WB-776

Figure 1. NASA WB-57F (N926NA)

Figure 2. NASA WB-57F (N928NA)

2.2 Dimensions

Figure 3 provides the basic aircraft dimensions for the WB-57F.

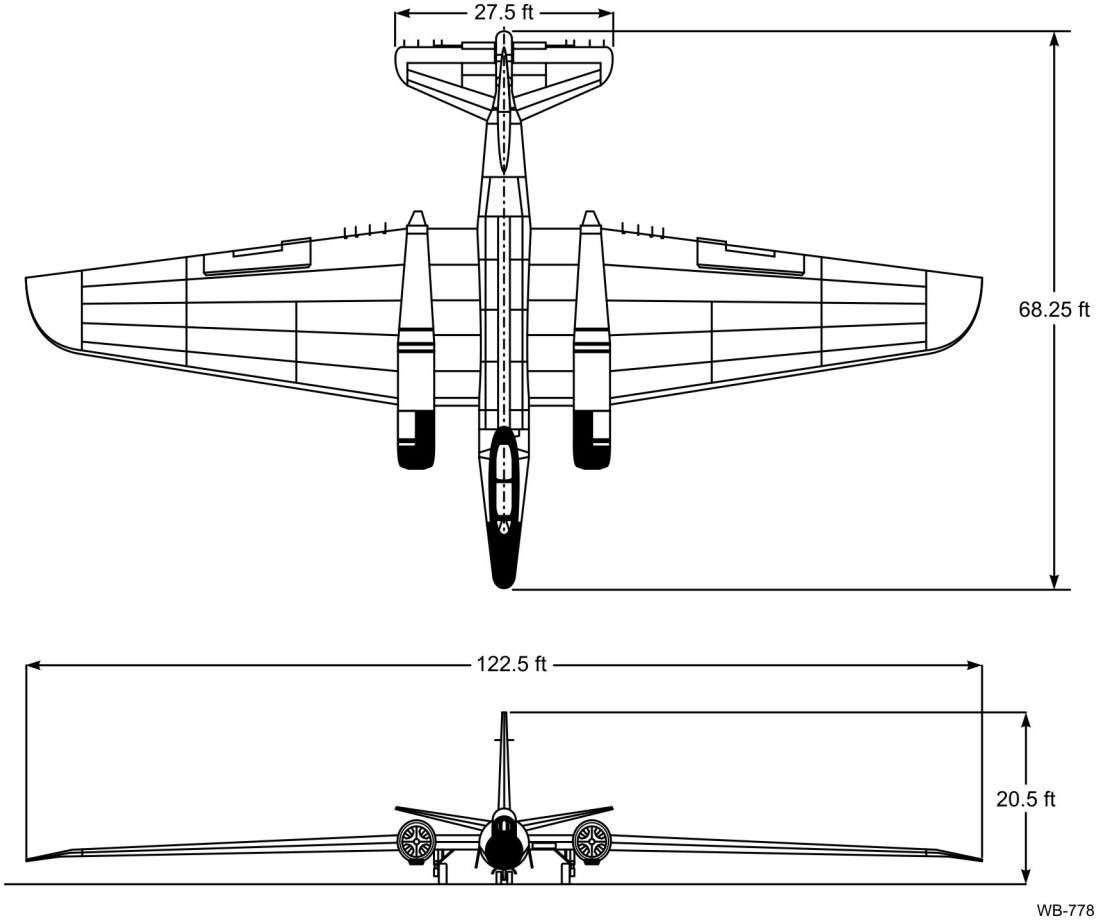

Figure 3. WB-57 Aircraft Dimensions

2.3 Performance (Altitude, Speed, Range, Endurance, Turn Performance)

Table 1. Performance and Capabilities

Aircraft Ceiling	Over 60,000 feet	True Air Speed at 60,000+ feet	~ 410 knots (Max Mach 0.78)
Maximum Flight Duration	~ 7.0 hours (not air refuelable)	Max. True Air Speed at Sea Level	190 knots
Range	~ 2,500 nautical miles	Minimum Runway Dimensions	7,000 ft x 150 ft (sea level)
Max Gross Weight	72,000 pounds	Maximum Crosswind Component	15 knots
Maximum Payload Weight	9,700 pounds (including empty weight of pallets, spear pods, & superpods)	Air to Ground Communications	UHF, VHF, HF, & SAT Phone
Wing Surface Area	2,000 square feet	Payload Power Options	- 115 Vac 400 Hz 3 Phase - 115 Vac 60 Hz Single Phase - 28 Vdc
Engine Thrust	15,500 pounds per TF-33 engine		

2.3.1 Airspeed

The WB-57 is limited to 190 knots indicated airspeed (KIAS) or Mach 0.78 (whichever is less) below 35,000 feet, and 175 KIAS or Mach 0.78 (whichever is less) above 35,000 feet. Minimum speed is approximately 120 KIAS at all altitudes. The maximum true airspeed (TAS) is 390 to 410 knots true airspeed (KTAS) depending on temperature. For payloads that need a slower true airspeed (for sensor resolution or other reasons), the minimum is approximately 330 KTAS at altitude. The WB-57 can experience winds up to 140 knots at altitude resulting in a wide range of ground speeds.

2.3.2 Turn Radius

Turn radius is a function of airspeed and bank angle. Airspeed varies with altitude and winds. The WB-57 is limited to a bank angle of 30 degrees. At altitude, turn radius with a 30 degree bank angle is approximately five nautical miles.

2.3.3 Climb and Descent Rates

Maximum climb rate is approximately 6,000 feet per minute (ft/min). A typical climb profile is as follows:

0 - 15,000 ft	4,000 ft/min
15,000 - 30,000 ft	2,500 - 3,000 ft/min
30,000 - 40,000 ft	2,000 ft/min
40,000 + ft	1,000 ft/min

Maximum descent rate is approximately 4,000 ft/min, though typical descent rate is approximately 2,000 ft/min.

2.4 Payload Weights

The WB-57 aircraft can carry up to 9,700 pounds (lbs) of payload (including the empty weights of pallets, spear pods, and superpods). Overall payload weight should be kept to a minimum when all other payload design requirements have been satisfied. The list below outlines maximum **gross** weight limits for the various payload integration locations. The aircraft is sensitive to center of gravity (CG) location, so ballast may need to be added (primarily in the nose) that would subtract from overall payload capacity.

- 3 ft Unpressurized Pallet Payload: 1,000 lbs max including pallet
  - Empty Pallet Weight = ~ 175 lbs
- 3 ft Pressurized Pallet Payload: 1,000 lbs max including pallet
  - Empty Pallet Weight = ~ 400 lbs
- 6 ft Unpressurized Pallet Payload: 2,000 lbs max including pallet
  - Empty Pallet Weight = ~ 257 lbs
- 6 ft Pressurized Pallet Payload: 2,000 lbs max including pallet
  - Empty Pallet Weight = ~ 700 lbs
- Nose Cone Payload: 954 lbs max including nose radome, CG dependent (see Figure 4)
  - Empty Radome Weight = ~ 232 lbs
- Aft Fuselage Payload: CG dependent, contact WB-57 Program Office
- Spear Pod Forebody Payload: 370 lbs max including forebody, CG dependent (see Figure 5)
  - Empty Spear Pod Forebody Weight = ~ 90 lbs
- Superpod Payload: 1,420 lbs max including pylon and forebody
  - Superpod Forebody Payload: 560 lbs max including forebody, CG dependent (see Figure 6)
  - Empty Superpod Pylon Weight = ~ 648 lbs
  - Empty Superpod Forebody Weight = ~ 140 lbs
- Wing Hatch Payload: 65 lbs max including wing hatch panel
  - Empty Wing Hatch Panel = ~ 5.5 lbs

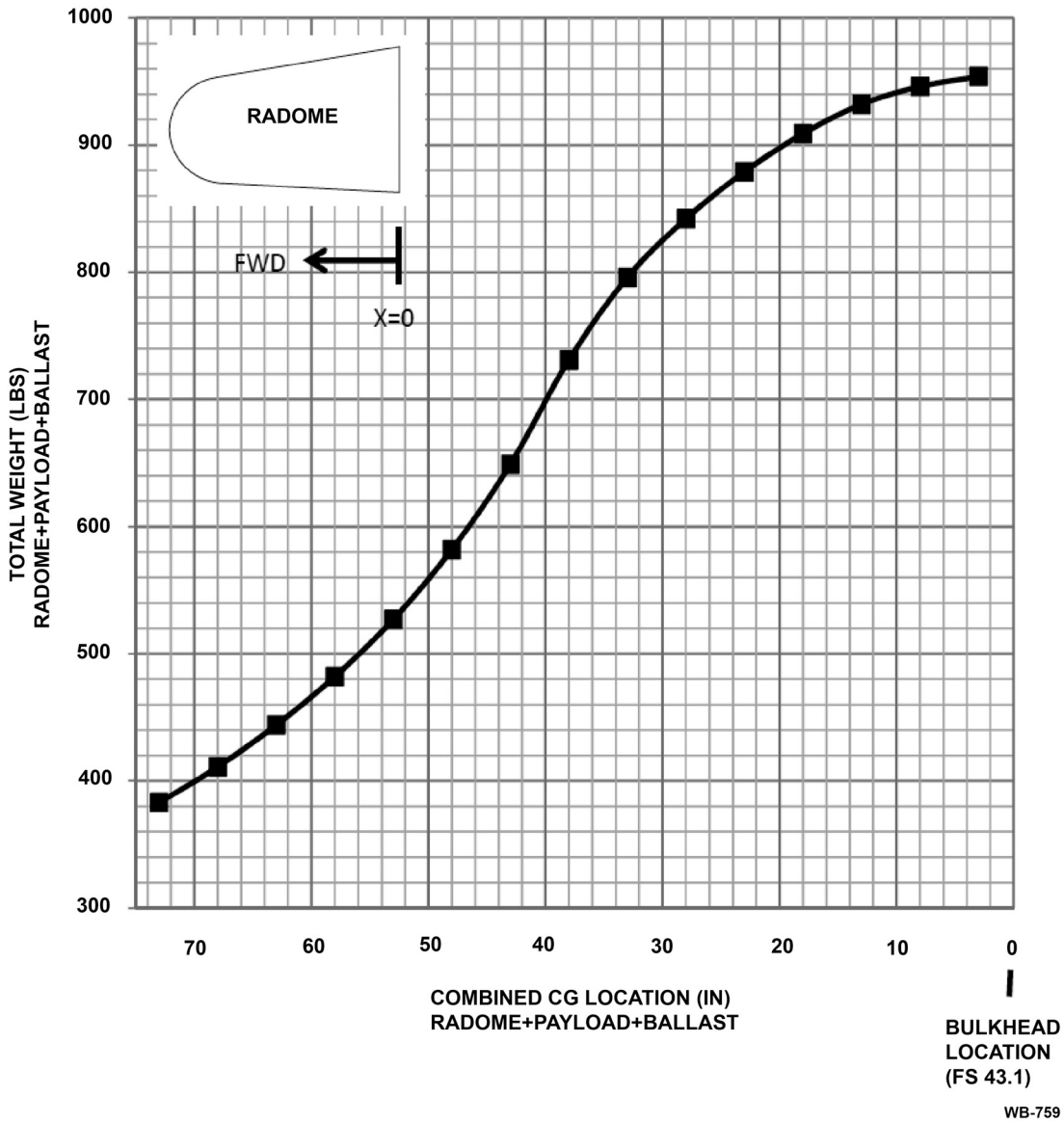

X (in)	73	68	63	58	53	48	43	38	33	28	23	18	13	8	3
W (lbs)	383	411	444	482	527	582	649	731	796	842	879	909	932	946	954

Origin of X dimension is at the forward bulkhead (FS 43.1) and positive running forward.
Standard empty radome weight is 232 lbs at X=23.1 inches.
Ballast amount governed by overall aircraft weight and balance requirements.

NOTE

This loading envelope assumes a relatively uniform loading of the WB-57 nosecone attachment ring. For payloads with attachment designs that may result in non-uniform loading of the nosecone attachment ring, contact the WB-57 Program Office for design guidance.

Figure 4. Nose Radome Loading Envelope

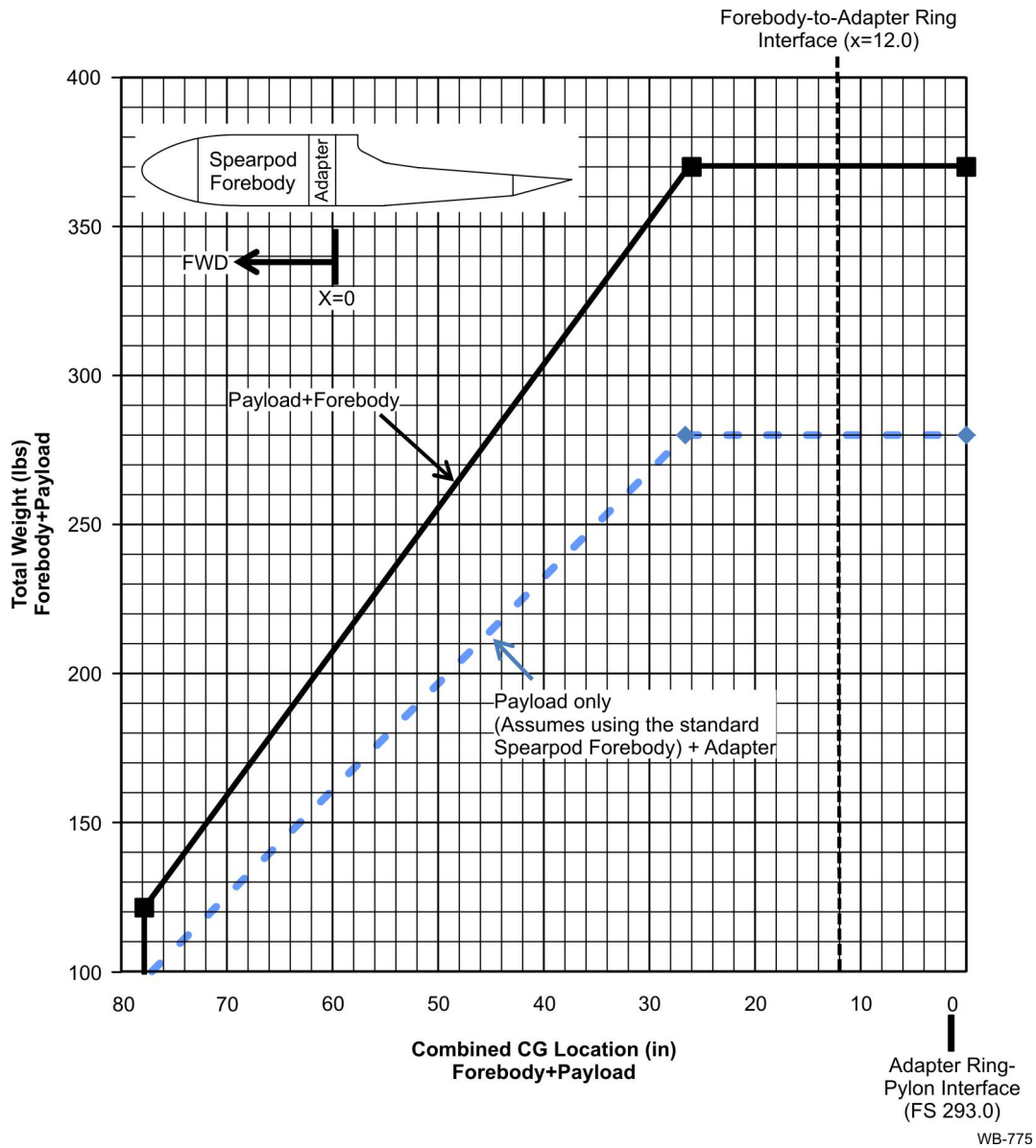

Payload+Forebody

X (in)	0	25.6	78	78
W (lbs)	370	370	122	0

Payload Only (assuming std Spearpod forebody)

X (in)	0	26.5	78
W (lbs)	280	280	95.3

Origin of X dimension is at the adapter ring to pylon interfaces (FS 293.0) and positive running forward.
Forebody-to-adapter ring interface is at X=12.0 (FS 281.0).
Standard empty weights as follows:

Spearpod forebody (P/N 5726012-301 or RX612) weight is 50.6 lbs at X=37.2 inches
Adapter (P/N 5755040-301) weight is 39.2 lbs at X=4.2 inches
Combined weight is 89.8 lbs at X=22.8 inches

Figure 5. Spear Pod Forebody Loading Envelope

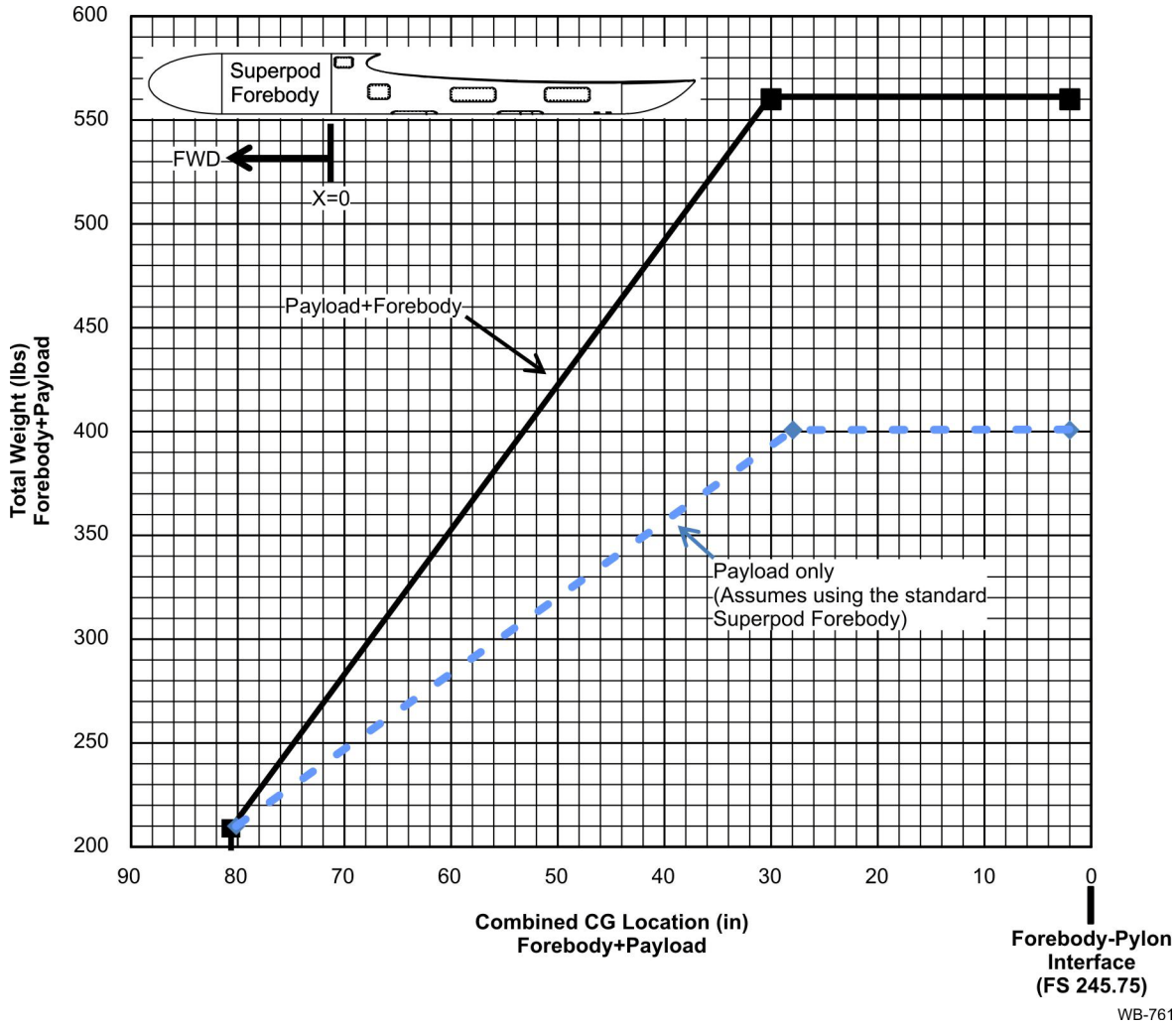

Payload+Forebody

X (in)	2	30	80.6	80.6
W (lbs)	560	560	208	0

Payload Only (assumes std ER-2 forebody)

X (in)	2	28	80
W (lbs)	400	400	210

Origin of X dimension is at the forebody to pylon interface (FS 245.75) and positive running forward.
Standard empty Superpod forebody (P/N EAW-1005-1) weight is 140 lbs at X=34.5 inches.
Weight and balance also governed by overall Superpod configuration (Forebody+Pylon).

Figure 6. Superpod Forebody Loading Envelope

2.5 Operating Restrictions (Airfield, Meteorological, etc.)

Minimum runway length and width, respectively, is 7,000 ft by 150 ft (at sea level). Maximum crosswind component for takeoff and landing is 15 knots.

2.5.1 Altitude Limitations

Flight rules dictate that the WB-57 may fly with a minimum altitude of 500 feet above ground level (AGL). This is subject to NASA management approval and is considered on a case-by-case basis.

Maximum altitude of the aircraft is dictated primarily by gross weight and overall drag. The aircraft is capable of higher altitudes later in flight due to fuel burn, while drag is increased by adding wing pods, instrument inlets, and any other items that protrude outside the aircraft.

2.5.2 Air Traffic Control Limitations

The WB-57 is confined to all the rules of Air Traffic Control (ATC), just as any other military or commercial aircraft would be. Therefore, it is important to consider any ATC jurisdiction when planning a flight. In general, it is usually easy to get clearances above 45,000 feet. It can be considerably harder to get cleared between 35,000 - 45,000 feet, especially around metropolitan areas. Below 35,000 feet it can be quite difficult to get a clearance unless the flight is in a low traffic area. This is not to say the aircraft cannot pass through these high-traffic areas; however, ATC may not allow the aircraft to maneuver as desired for experimental purposes.

2.5.3 Low Visibility Limitations

For flight operations at night or in cloudy conditions, the pilot will be more conservative with fuel estimations, which may decrease the flight time slightly. The aircraft can be equipped with weather radar, which will aid in deconflicting with thunderstorms during both day and night operations; however, it should be noted that certain payloads in the nose may limit or preclude the use of the radar. In these instances, another deconfliction method has been employed by the use of a stormscope and/or ground radar stations.

3.0 ENVIRONMENT

3.1 Pressure

Payload integration locations are typically unpressurized. However, conditioned bleed air provides pressure [5 pounds per square inch gauge (psig)] to the nose cone compartment and pressurized pallet compartments if required.

3.2 Temperature

Temperature levels in payload compartments vary according to flight profile and ambient air conditions; however, tarmac temperatures in the summer can reach as high

as 140°F (60°C) and temperatures at high altitude drop to as low as -76°F (-60°C). Water condensation in Houston, Texas is very likely upon descent to landing. Ground Support Equipment (GSE) provides the capability for payload cooling operations on the ground prior to taxi. Researchers may incorporate heaters and chillers into their payloads for use in flight. Refer to the following link for detailed pallet temperature data:

http://jsc-aircraft-ops.jsc.nasa.gov/wb57/designaids.html

3.3 Load and Acceleration

The WB-57 gravity (g) load envelope is -1.00 to +2.25 g.

3.4 Airflow and Boundary Layer

Refer to the following link for detailed boundary layer data:

http://jsc-aircraft-ops.jsc.nasa.gov/wb57/designaids.html

3.5 Stability/Attitude

In level flight the aircraft pitch attitude ranges from 0 degrees to approximately 8 degrees nose up. The pitch attitude varies with gross weight and indicated airspeed. Pitch attitude increases with increasing gross weight and decreasing indicated airspeed. During normal cruise, or at a normal data collection airspeed of around 130 knots indicated airspeed (KIAS), the pitch attitude will range between 0 and 4 degrees nose up; decreasing as fuel is consumed.

The WB-57 autopilot, in smooth air, will control the airplane to ± 1 degree in pitch, roll and yaw. The autopilot can be coupled to a Global Positioning System (GPS) navigation system and will control the airplane to within approximately 0.1 nautical mile lateral deviation from the desired course. Aircraft heading will differ from the desired course depending on the magnitude of the crosswind component TAS. This angular difference, known as crab angle, increases with increasing cross wind component and decreasing true airspeed. Crab angles can be as high as 20 degrees with a high crosswind component and low true airspeed.

The airplane's pitch attitude on the ground is approximately 3 degrees nose down. The airplane can be leveled with jacks if required for ground operations.

3.6 Vibration and Shock

Vibration levels within the WB-57 during flight are quite low. Levels during ground operations are somewhat higher, especially in the low frequency range. Refer to the following link for detailed vibration data:

http://jsc-aircraft-ops.jsc.nasa.gov/wb57/designaids.html

3.7 Radio Frequency and Electromagnetic Interference

Frequency ranges of the navigation, radio, and radar units on the WB-57 are shown in Table 2. Experimenters are cautioned that transmitters on the aircraft may cause interference with their equipment.

Table 2. WB-57 Radio Frequency Chart

Equipment	Transmitting/Receiving Frequency(ies)	Receiving	Transmitting
Automatic Direction Finder (ADF)	190.0 kilohertz (kHz) to 1860.0 kHz	X	
HF Radio	2.000 - 2.9999 Megahertz (MHz)	X	X
Marker Beacon	75.0 MHz	X	
VHF Omni Directional Radio Range (VOR)	108.00 - 117.95 MHz	X	
Glideslope Receiver	329.15 - 335.00 MHz	X	
Very High Frequency (VHF) Radio	118 - 136.957 MHz	X	X
Ultra High Frequency (UHF) Radio	225.000 - 399.975 MHz	X	X
ATC Transponder	1030 MHz	X	
	1090 MHz		X
Traffic Alert & Collision Avoidance System (TCAS)	1030 MHz		X
	1090 MHz	X	
Distance Measuring Equipment (DME) and TACAN	960 - 1215 MHz	X	X
GPS	1575.42 (± 2.0) MHz	X	
Iridium Satellite Phone	1610 - 1626.5 MHz	X	X
Radar Altimeter	4.2 - 4.37 GHz	X	X
Weather Radar	9375 ± 30 MHz	X	X
Time Code Generator (IRIG-B)	1575.42 (± 2.0) MHz	X	
INMARSAT Satellite Phone	1626.5 - 1646.5 MHz	X	
	1525.0 - 1545.0 MHz		X

3.8 Radiation

There are no known radiation effects to personnel or instruments on board the WB-57 aircraft. Though the WB-57 flies at a higher altitude, radiation effects are not significantly different than those experienced on a standard commercial airliner.

4.0 PAYLOAD ACCOMODATIONS

4.1 Physical

4.1.1 Locations and Dimensions

The WB-57 aircraft can carry up to 9,700 lbs of payload (including the empty weights of pallets, spear pods, and superpods). Typical payload integration locations are detailed in Figure 7. The WB-57 employs a pallet system in the main fuselage area. The pallet system consists of interchangeable pallet modules. Pressurized and unpressurized pallets are available. The pallet system will carry a total of 4,000 lbs including pallet weight. Large payloads may be installed in the payload bay without use of the pallet system, attaching directly to the airframe. Payload bay rails will support a maximum of 5,000 lbs. Lighter, smaller weight payloads can also be carried in the forward and aft transition sections, nose cone, spear pods, superpods, wing hatches, aft fuselage, and/or tailcone. Specifics on these payload mounting locations are contained in Section 4.1.1.1 thru Section 4.1.1.7 below, and drawings can be found on the WB-57 website at the following link:

http://jsc-aircraft-ops.jsc.nasa.gov/WB57/designintegration.html

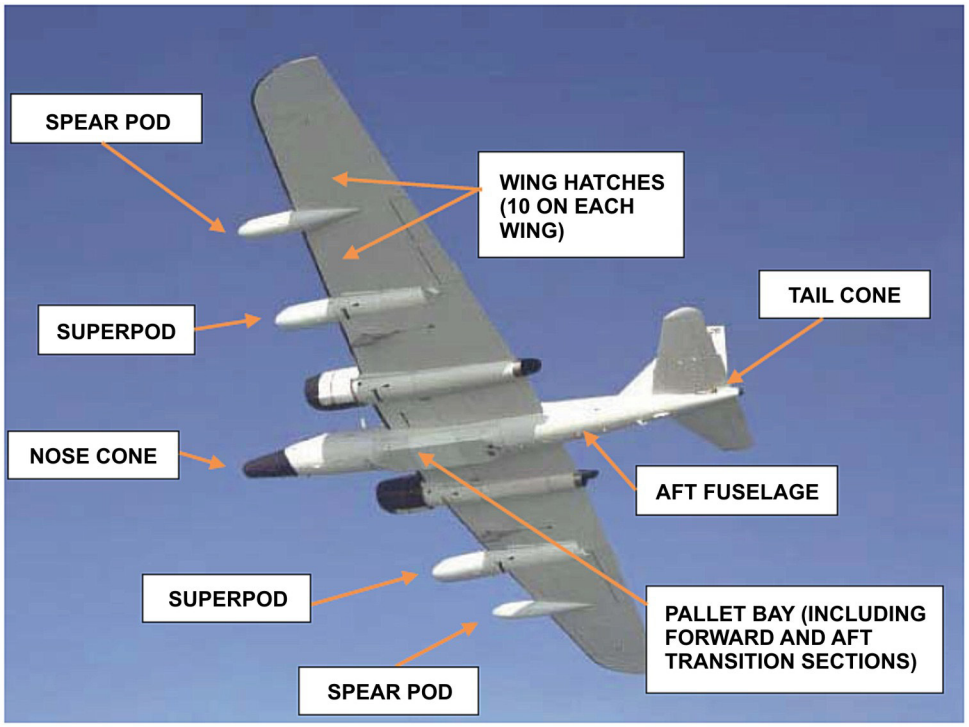

WB-779

Figure 7. Typical WB-57 Payload Integration Locations

For integration economy, pallets, wing pods, nose cones, and 15 pounds per square inch (psi) pressure containers are available for shipment to a researcher's facility. The modular feature of the pallets, wing pods, nose cones, and pressure containers allow for sensor development, integration, checkout, and maintenance away from the aircraft.

The WB-57 has been modified to provide a standardized electrical interface for payload integration, power, and payload control operations. The standard interface permits the aircraft to carry multiple payloads at the same time.

4.1.1.1 Pallets

Payloads can be integrated by use of WB-57 pallets. Pallets are located mid-fuselage on the belly of the airplane in the former bomb bay (now known as the pallet bay, payload bay, or Q-bay). They come in 3 ft or 6 ft sizes (measured longitudinally along the aircraft), pressurized or unpressurized configurations, and have convenient power panels located in close proximity to mounting locations (see Figure 8 for a standard 3 foot pallet). Pressurized pallets are pressurized to cockpit pressure (approximately 5 psig). All pallets have detachable casters for use during ground operations. Most have standard inlet holes available for payload inlets. Six-inch dropdown rails are available on most pallets, which provide added payload volume in the pallet bay but reduce the ground clearance of the pallet. Modifications to pallets are allowed with WB-57 Program Office approval. Pallets are available for shipment to researcher laboratories for payload design purposes.

NOTE

3 foot and 6 foot pallets can be installed on the airplane in multiple configurations so long as the 12 feet of allotted space in the pallet bay is not exceeded (e.g., two 3 foot pallets may be installed with one 6 foot pallet, or two 6 foot pallets may be installed with no 3 foot pallets, or four 3 foot pallets may be installed with no 6 foot pallets).

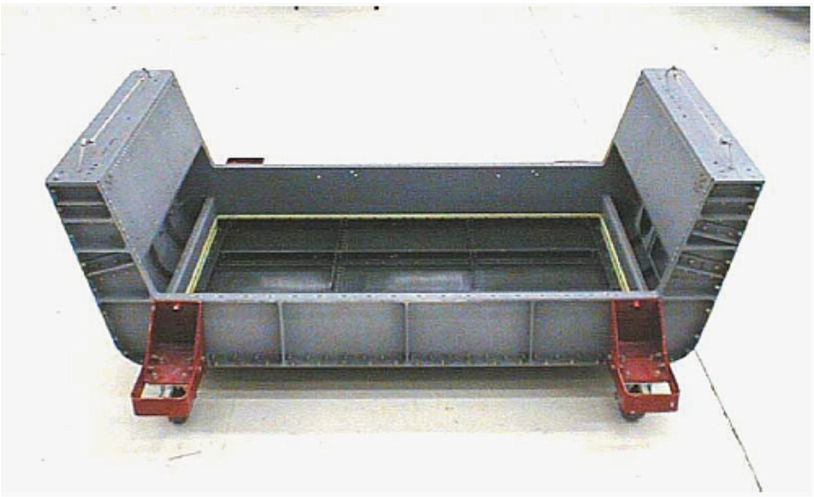

WB-780

Figure 8. WB-57 3 Foot Pallet

4.1.1.2 Pressure Containers

Payloads can be mounted within a standard 15 psi pressure container which will generally maintain one atmosphere (ATM) pressure at altitude (see Figure 9). This is useful to house spinning disk drives or other electronics which are sensitive to low pressure environments. Active pressurization at 5 psig is available from the bleed air system if desired. The pressure containers have standard panels for pressure relief and check valves, and electrical interface. Pressure containers are available for shipment to researcher laboratories for payload design purposes.

WB-781

Figure 9. 15 psi Pressure Container in 3 Foot Pallet

4.1.1.3 Spear Pods

Payloads can be integrated in WB-57 wing spear pods. Spear pods are located outboard of the engines and have convenient power panels located in close proximity to their mounting location. They come in one size and are unpressurized (see Figure 10). Spear pod rigs/carts are available at EFD for use during ground operations and installation/removal procedures. Spear pods are available for shipment to researcher laboratories for payload design purposes. Inlet holes are available on all spear pods. Spear pod modifications are allowed with WB-57 Program Office approval.

WB-782

Figure 10. WB-57 Spear Pod

4.1.1.4 Superpods

Payloads can be integrated in WB-57 wing superpods. Superpods are located immediately outboard of the engines and have convenient power panels located in close proximity to their mounting location. They come in one size and are unpressurized (see Figure 11). The superpod is comprised of two major components, the superpod pylon and the superpod forebody. The superpod pylon provides the interface to the wing, a forward interface ring with latches for mounting of the superpod forebody, and secondary locations for mounting payload hardware. The superpod forebody is the nose of the superpod and primary location for mounting payloads. The superpod forebody is the same type as that used on the NASA ER-2 to allow payload portability between the two platforms. No modifications are currently permitted on superpod forebodies.

WB-783

Figure 11. WB-57 Superpod

4.1.1.5 Nose Cone

Payloads can be integrated in the WB-57 nose cone. The nose cone has convenient power panels, a fiber optics interface, and other interfaces located in close proximity to its mounting location (see Figure 12). It can be either pressurized or unpressurized. When pressurized, the nose cone is pressurized at cockpit pressure (approximately 5 psig). A nose cone rig is available at EFD for use during ground operations and installation/removal procedures. A common nose cone bulkhead ring is mounted on each airplane allowing nose cones to be used on either airplane without modification. Nose cones are available for shipment to researcher laboratories for payload design purposes. Inlet holes are available on the nose cone. Modifications to nose cones are allowed with WB-57 Program Office approval.

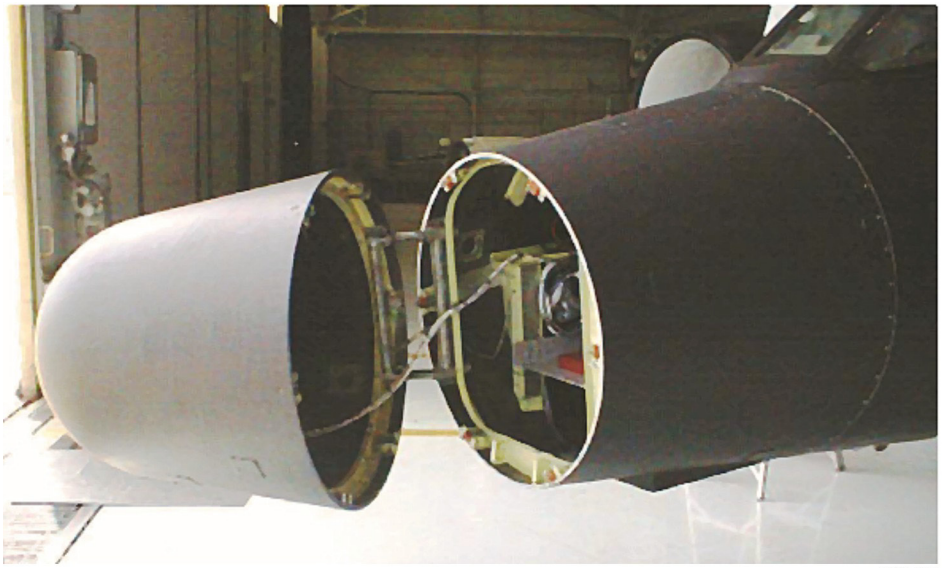

WB-784

Figure 12. WB-57 Nose Cone

4.1.1.6 Aft Fuselage/Tail Cone

Payloads can be integrated in the WB-57 aft fuselage. The aft fuselage is located within the body of the airplane from mid-wing to the tail cone, and is unpressurized. Standard inlet holes are available on the aft fuselage. Aft fuselage modifications are allowed with WB-57 Program Office approval.

4.1.1.7 Wing Hatches

Small payloads can be integrated onto WB-57 dry bay wing hatches. There are 20 total wing hatches located on the underside of the wings (10 on each wing).

4.1.2 Mass and Moment Constraints

Reference Section 2.4, Payload Weights.

4.1.3 Cabin and Cargo Access Constraints

Payloads and/or components are not accessible during flight

4.1.4 Mechanical Interfaces

4.1.4.1 Structural Attachments (Hard Points)

Hard points are located outboard of the engine on each wing for mounting the superpods and spear pods. Contact the WB-57 Program Office to inquire about use of hard points to mount payloads other than the superpods or spear pods.

4.1.4.2 Racks

Standard 19 inch racks are available in the forward transition section of the WB-57 aircraft and the superpod pylon. Rack space is limited. Contact the WB-57 Program Office for further information.

4.1.4.3 Pods

Payloads can be integrated in WB-57 spear pods or superpods (refer to Section 4.1.1.3. and Section 4.1.1.4.)

4.1.4.4 Equipment Bays

The pallet bay, or Q bay, is the primary equipment bay on the WB-57. It is 12 feet long and can accommodate standard 3 foot or 6 foot payload pallets in the lower fuselage (refer to Section 4.1.1.1).

Lighter, smaller weight payloads can also be carried in the forward and aft transition sections, nose cone, spear pods, superpods, wing hatches, aft fuselage, and/or tailcone (see Figure 7).

4.2 Electrical Power and Interface

Payloads installed in the aircraft have the following power options:

- 115 Vac 400 Hz, 3 phase (~ 100 amps/phase max)
- 115 Vac 60 Hz, single phase (~ 50 amps max)
- 28 Vdc (~ 400 amps max)

These power options are conveniently available at all typical payload integration locations through installed power panels. Connections to aircraft power panels are through standard Military Specification connectors. Internal data bus connections are also available for payloads. WB-57 data buses provide IRIG-B timing, inertial reference system, and various aircraft parameters to the payload data processor/recorder (refer to Section 7.3 for detailed information on electrical system requirements).

An overall layout schematic of the aircraft payload interface for both aircraft is available at the following link: http://jsc-aircraft-ops.jsc.nasa.gov/wb57/designaids.html

4.2.1 Aircraft/Experiment Electrical Interface

The Experiment Interface Panel (EIP) (Figure 13) links the payload to the aircraft electrical system, the Experiment Control Panel (ECP) in the rear cockpit, and the aircraft data system. N926 has six total EIPs (two in the pallet bay, and one each in the nose, tail, left wing, and right wing). N928 has four total EIPs (three in the pallet bay, one in the nose). In addition, each superpod pylon has one EIP and one auxiliary power panel.

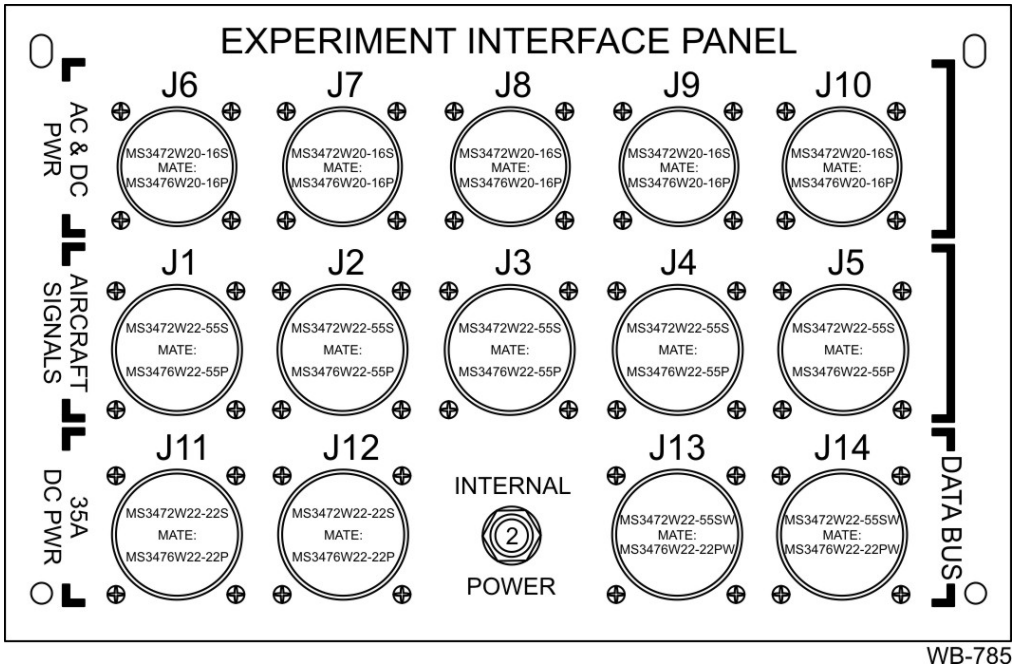

Figure 13. Typical Experiment Interface Panel (EIP)

Up to five payloads can be connected to each EIP using connectors J1 thru J5. Control switches to operate the payloads are located on the ECP in the rear cockpit. The ECP consists of four rows of five switches (see Figure 14). Each row of switches corresponds to receptacles J1 thru J5 on a given EIP. The control switches activate a single pole, double throw (SPDT) relay (see Figure 15). The relay contacts are rated at 1.0 amp maximum. The contacts are user definable and are available at receptacles J1 thru J5 on the EIP.

Figure 14. Experiment Control Panel

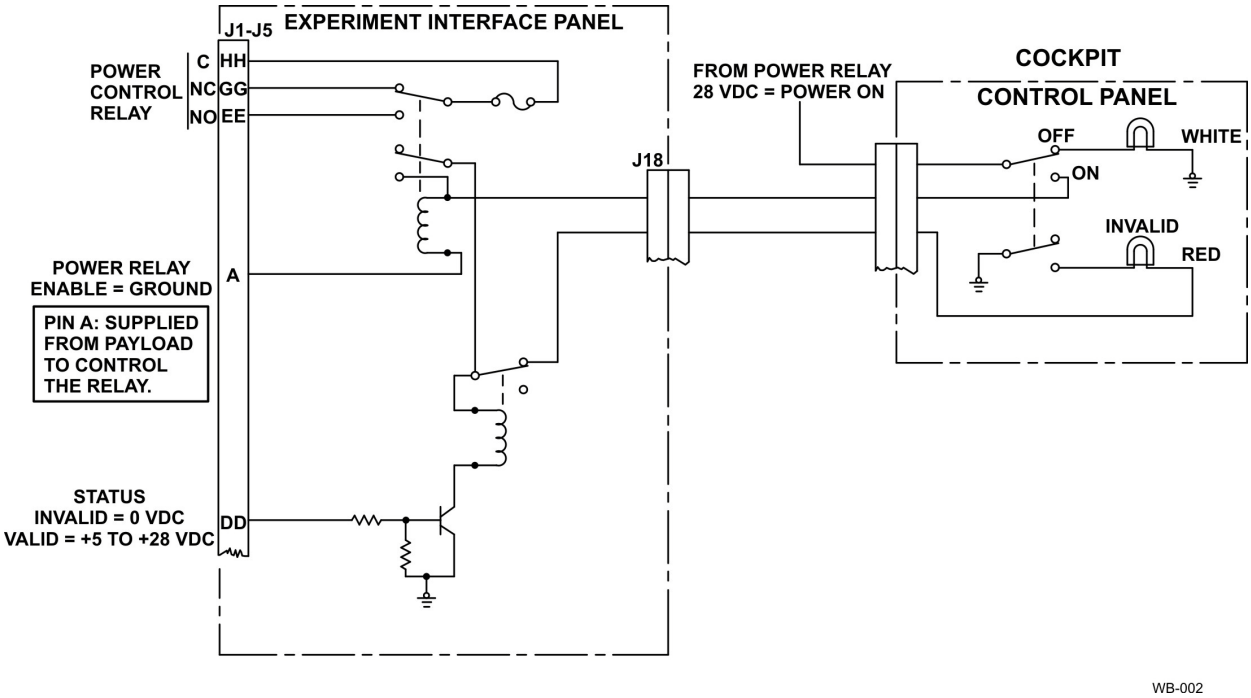

Figure 15. Power and Status Simplified Schematic

EIP receptacles J1 thru J5 provide the various timing, control and aircraft navigation signals. The pinout for these receptacles is shown in Figure 16 and Figure 17.

AC and DC power are provided through identical EIP receptacles J6 thru J10. These five receptacles provide a total of 15 amps of AC current per circuit or 15 amps of DC current per circuit. Each plug (J6-J10) contains two 115 Volts Alternating Current (Vac) 400 Hz 3-phase circuits and two 28 Vdc circuits. Each pin is limited to a maximum of 15 amps. Figure 18 shows the pinout configuration for these receptacles.

EIP receptacles J11 and J12 are identical and accommodate higher current DC power connections. These receptacles provide a total (per circuit) of 35 amps. Figure 19 displays these pinout configurations.

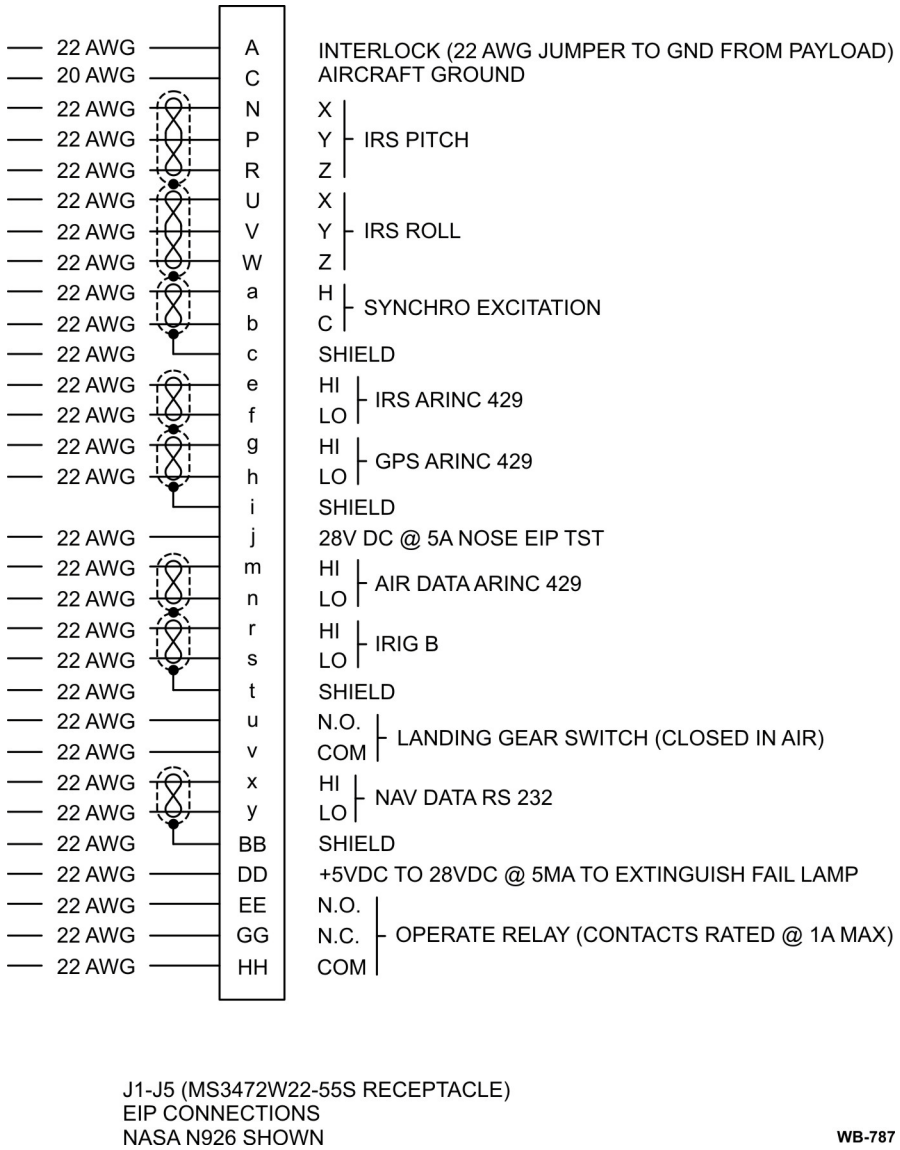

Figure 16. Pinout Receptacles J1 thru J5 (N926NA)

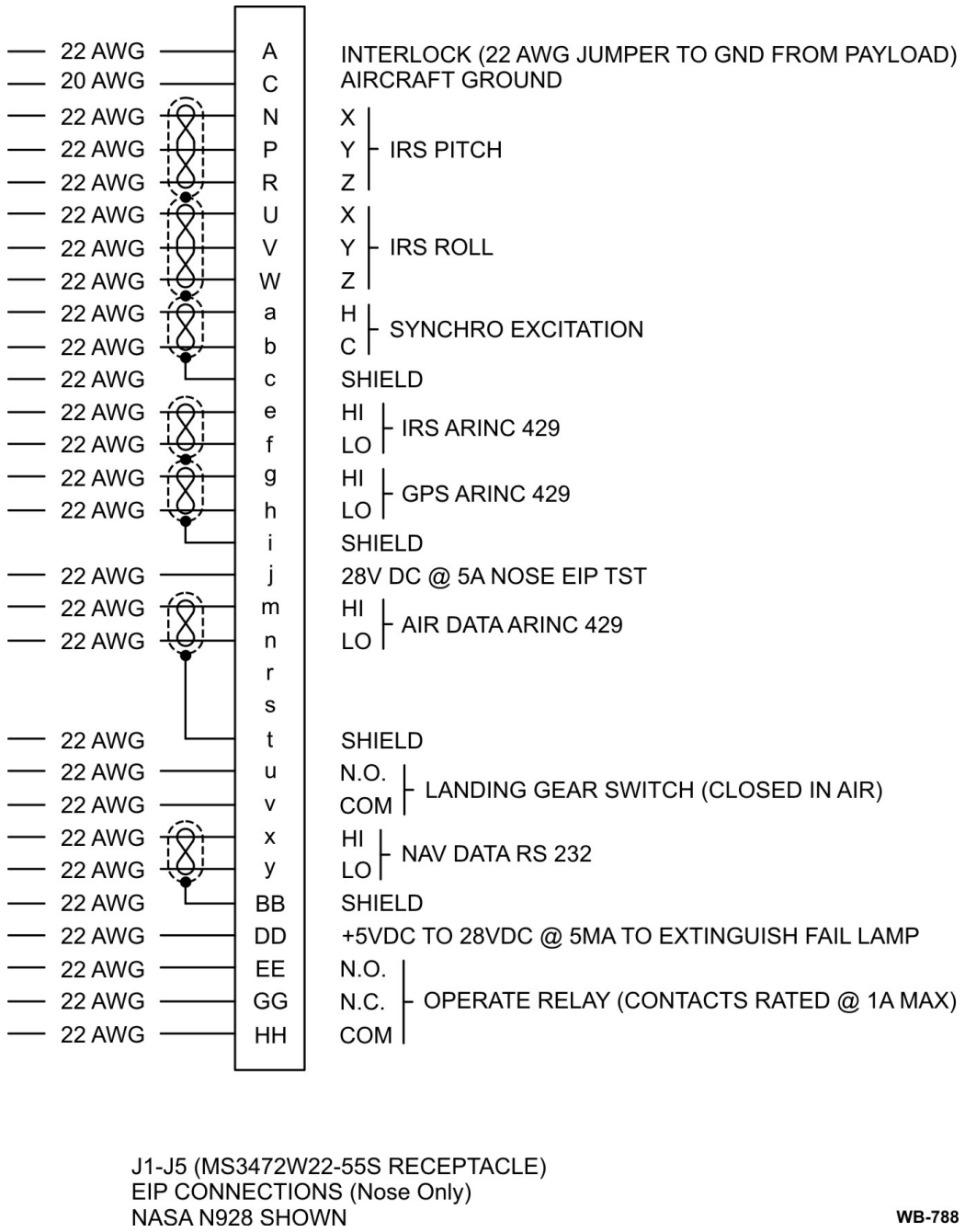

Figure 17. Pinout Receptacles J1 thru J5 (N928NA)

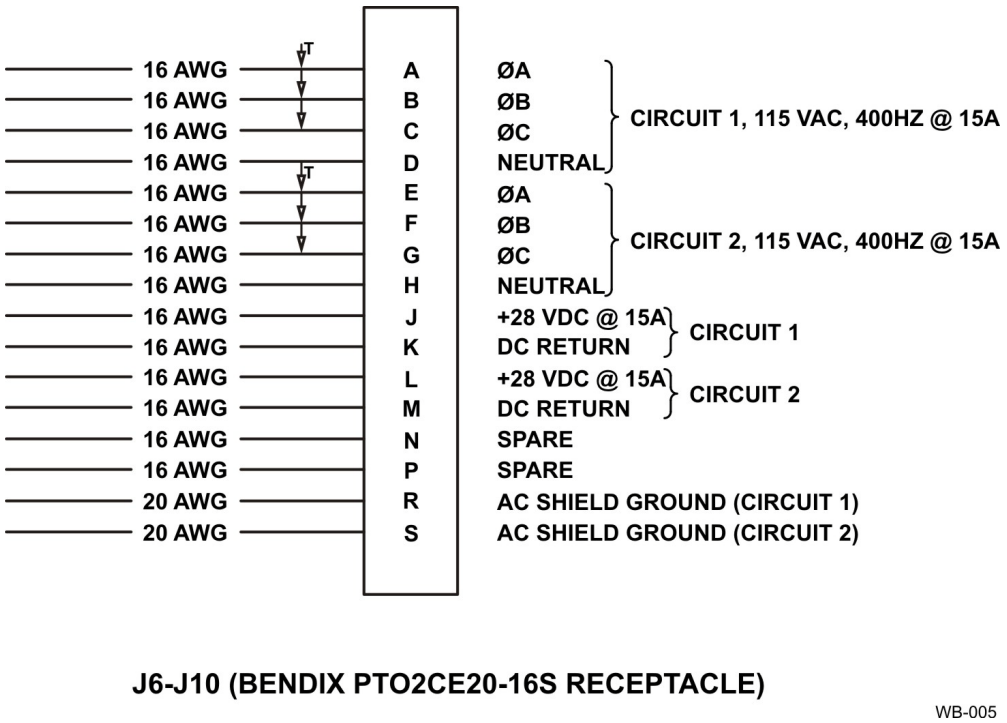

Figure 18. Pinout Receptacles J6 thru J10

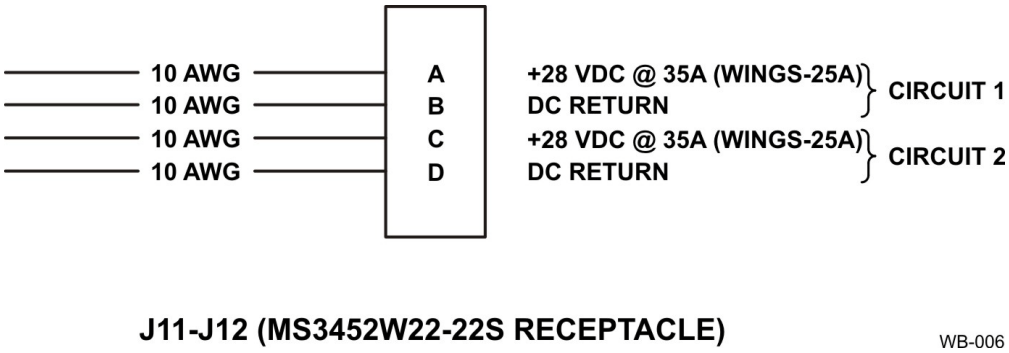

Figure 19. Pinout Receptacles J11 and J12

4.2.2 Auxiliary Power Panels

All typical payload integration areas have additional power interface panels. These panels provide connections to 115 Vac 60 Hz power in addition to the 115 Vac 400 Hz and 28 Volts Direct Current (Vdc) power provided through the EIPs. Configurations for these power panels vary between the payload locations. Figure 20 and Figure 21 detail the typical arrangement and connectors used for each type of power. Power to these panels is not individually controllable like the EIPs; they are energized throughout the entire flight. 115 Vac 60 Hz power is limited and is therefore not the preferred option. Whenever possible, 115 Vac 400 Hz should be used.

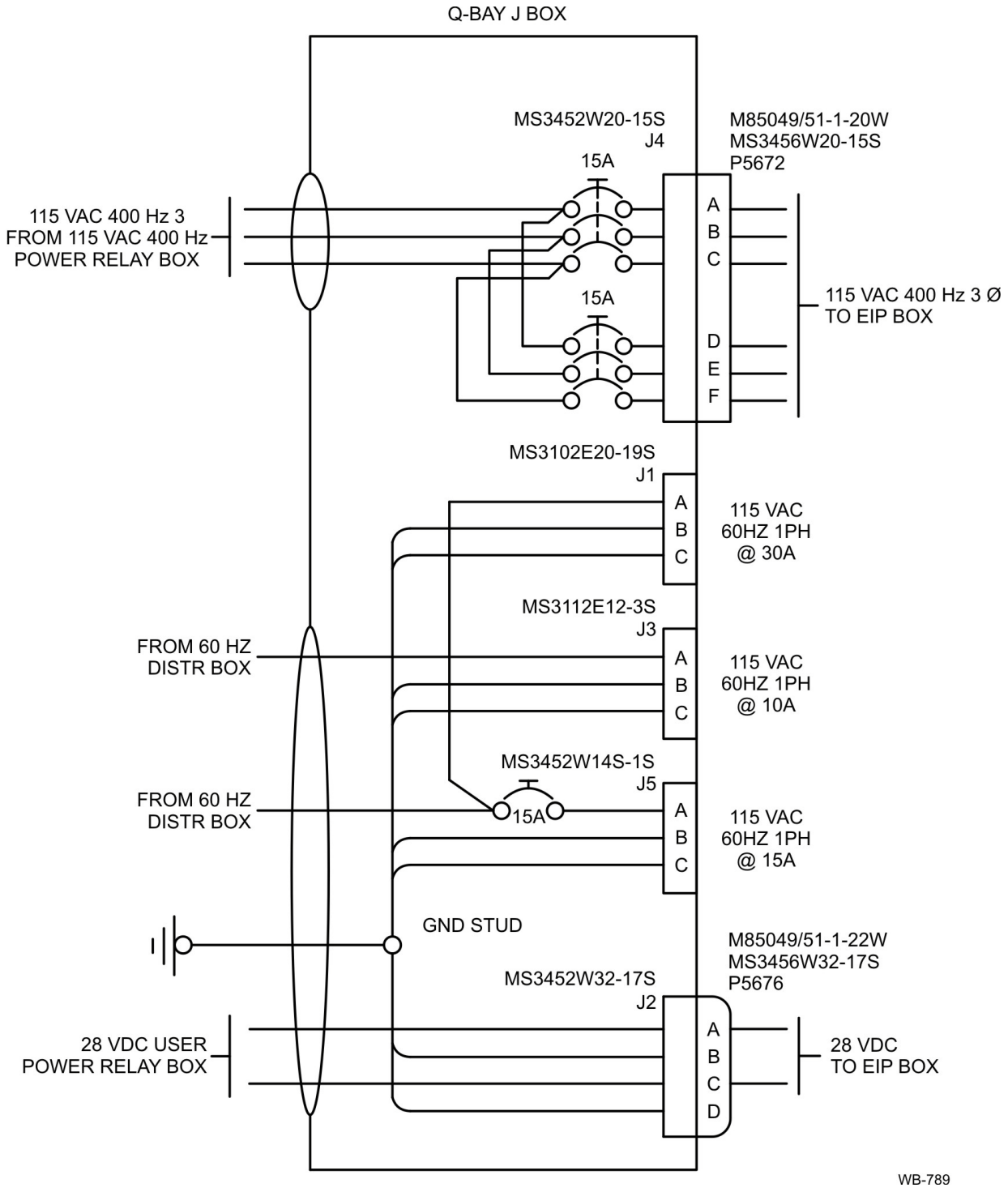

Figure 20. Typical Auxiliary Power Panel (N926NA)

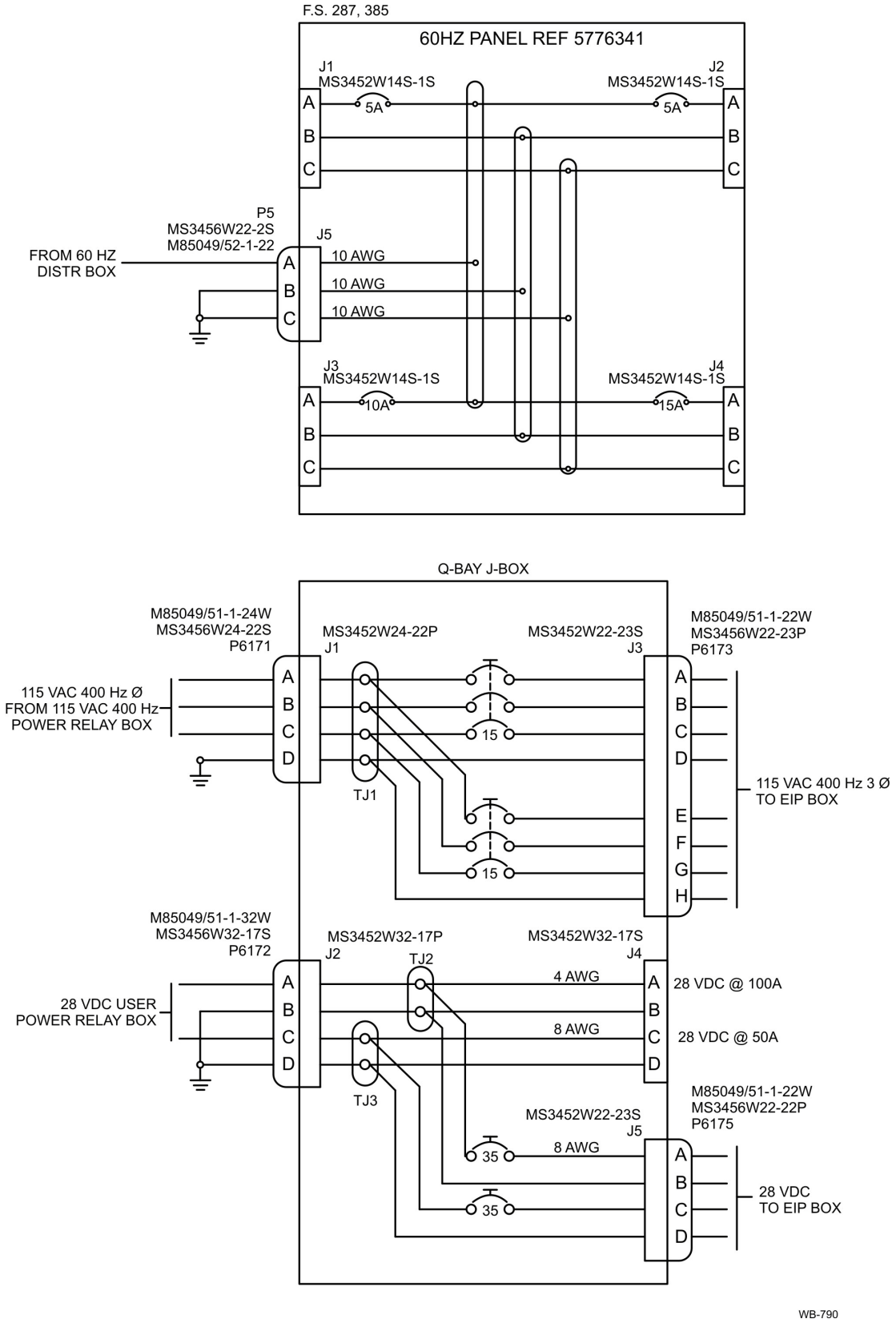

Figure 21. Typical Auxiliary Power Panel (N928NA)

4.3 Payload Control and Interface

Switches on the ECPs in the rear cockpit are available to control power to experiments (see Figure 14). Each switch is simply an On/Off switch. Once power is provided to the instrument, payload operations should be handled internally. For payloads that are not totally automated, contact the WB-57 Program Office to discuss payload control options. The configuration of the SEO (backseat) station is shown in Figures 22 and 23.

For optical payloads, a Pointing and Tracking System (PTS) is available.

WB-791

Figure 22. Backseat – Right Side Console Configuration

WB-792

Figure 23. Backseat – Forward Console Configuration

4.4 Experimenter Ports (Viewports, Apertures, and Windows)

Ports can be incorporated as required into pallets, nosecones, wing hatches, spear pods, or superpod pylons. No modifications are currently permitted on superpod forebodies. Contact the WB-57 Program Office for further information.

4.5 Probes, Venturis, and Inlets

Probes, venturis, or inlets can be incorporated as required into pallets, nosecones, wing hatches, spear pods, or superpod pylons. No modifications are currently permitted on superpod forebodies. Contact the WB-57 Program Office for further information.

4.6 Facility Instruments

4.6.1 Standard Aircraft Systems (Performance, Calibration)

There are no standard facility instruments currently available on the WB-57.

4.6.2 Cameras and Video

There is no standard camera or video capability available on the WB-57.

4.7 Science Crew Complement

The WB-57 flight crew consists of the Pilot and the SEO. There is no additional science crew aboard the aircraft. The SEO is trained in payload operations by the payload customer.

5.0 COMMUNICATIONS, NAVIGATION, AND DATA ACQUISITION, DISTRIBUTION AND DISPLAY

5.1 Voice and Data Communications

5.1.1 Voice Communications

The WB-57 is equipped with Iridium SAT Phone, secure UHF, VHF, and HF radios for flight crew use in communication with payload personnel on the ground. UHF is the preferred and primary means of communication with payload personnel on the ground.

5.1.2 INMARSAT

The WB-57 is equipped with a 4-channel INMARSAT system. Customers desiring to use the INMARSAT system are responsible for all arrangements and costs required to operate the system. The WB-57 Program Office is able to assist with aircraft/payload integration only.

5.2 Antennas

Both aircraft have a GPS antenna farm on the upper fuselage. Please contact the WB-57 Program Office for specifics on current GPS antennas available for use. There is also a GPS repeater in Hangar 990 for use in payload ground testing and checkout.

5.3 Flight Management and Navigation Systems

In order to position the aircraft properly to collect data required by customers, the crew must enter precise navigational waypoints into the WB-57 Flight Management System (FMS). There are two methods of entering data into the FMS. If the number of waypoints is small (10 or less), manually entering waypoints is reasonable. If the number of waypoints is significant (more than 10), then data transfer from a digital source is required. Each method requires a unique waypoint format (described below). If the data transfer method is used then the payload team should provide the crew with both formats. Both formats provide waypoint name, latitude, and longitude.

Manual format:

NNNNN, +/- DD MM.MM, +/- DDD MM.MM

Data Transfer format:

NNNNN, +/- DD.DDDD, +/- DDD.DDDD

Example (a waypoint northeast of San Antonio, TX):

Manual: NW001, 29 58.50, -098 15.45

Data Transfer: NW001, 29.9750, -098.2575

In the above format descriptions the "N" is an alpha-numeric character in a five-character waypoint name. The name should describe the location of the waypoint (i.e., NW001 could be the northwestern most point and also the first to be flown). The number sequence, therefore, should show the order in which the payload team wants the waypoints to be flown. This is just an example and other naming options are possible. As long as these other options are coordinated with the crew in advance and as long as they remain unique in the navigation database, they should work. The "+/-" in front of the first set of numbers indicates North or South latitude, "+" for North and "-" for South. The "+/-" in front of the second set of numbers indicates East or West longitude, "+" for East and "-" for West. The "D" stands for degrees of latitude or longitude. The "M" stands for minutes of latitude or longitude. The Manual format is in degrees and minutes to two decimal places. The Data Transfer format is in degrees to four decimal places.

The Manual format should be provided to the crew on as few pages as possible; one page is desirable. A map of the waypoints with ground references is highly desirable (Google Earth has been used in the past and works well).

The Data Transfer format must be a text file (txt). As with the Manual format, a map of the waypoints is desirable.

Delivery of waypoint data to the crew should be done as early as possible. The day prior is desirable; however we know that that is not always possible. Two hours prior to takeoff for all low flights and three hours prior for all high flights is sufficient in most cases. If the flight profile is particularly complicated or there are a large number

of waypoints then a discussion with crewmembers early in the operation shall be accomplished. A mutual timeline can be worked out.

5.4 Flight Parameter Data Recording

Aircraft attitude, navigational data (GPS and inertial), ambient flight path atmospheric conditions, and precise timing is recorded throughout the flight on the WB-57 Nav Data Recorder. This data stream is also available to aircraft payloads for data processing/recording.

5.5 Data Acquisition

Aircraft attitude, navigational data (GPS and inertial), ambient flight path atmospheric conditions, and precise timing are distributed throughout the aircraft through the EIP connectors J1 thru J5. The pin-outs are described in Figure 16 and Figure 17, and the data parameters are detailed in Appendix D. This data is available at each EIP location, including the nose on N926, and at the nose only on N928. Contact the WB-57 Program Office early in the integration design process if you have additional requirements.

5.6 Data Distribution and Interface

The WB-57 is equipped with two Intelligent Data Acquisition Node (IDAN) onboard computers running Windows XP. One computer (IDAN1) is dedicated to aircraft use (e.g., Jeppesen moving map display). The other computer (IDAN2) is available for onboard processing and use by payload customers. This computer is equipped with a removable solid state disk drive.

The user may elect to have embedded computer(s) as part of the payload. The WB-57 is equipped with KVM switch hardware, which is accessible by the user, to allow multiple computers (e.g., IDAN2 and embedded payload computer) to access the video displays, mouse, and keyboard in the rear cockpit (SEO station). Removable drives are preferred to minimize de-integration of payloads. Solid state hard drives are recommended if a pressure container is not used to house electronics, as spinning hard drives may not operate in a low pressure environment. Contact the WB-57 Program Office for details of the KVM hardware and interface requirements.

The WB-57 has a common fiber optics interface that runs from the payload bay to the canted bulkhead (behind the cockpit) to the nose bulkhead (forward of the cockpit). This interface is populated with 37 fiber pairs consisting of: 16x 50 micron, 13x 62.5 micron, and 8x 9 micron fibers. The fiber interface is not used by aircraft systems and may be used by the payload as needed. Mating connectors will be provided to users upon request.

5.7 Data Display

Depending on payload configuration, data display is available to the SEO in the backseat via two monitors (15 inch and 10 inch) (see Figure 23).

5.8 Time Information

An IRIG-B time code generator is available on the aircraft.

6.0 PAYLOAD DESIGN PLANNING, ENGINEERING, AND INTEGRATION PROCESSES

6.1 Experiment Development and Planning

6.1.1 Airborne Science Flight Requests

Contact the WB-57 Program Office to discuss the feasibility of flying an instrument on the WB-57, to establish tentative dates, and to answer any specific questions. This should occur at least **six months** prior to flight. A payload integration project manager will work with you to guide you through the whole process. It is beneficial to maintain frequent communications with your payload integration project manager to identify and resolve potential problem areas as early and as smoothly as possible.

Phone: 281-244-9034
Fax: 281-244-9883
E-Mail: nasa-wb57@nasa.gov

Additional contact information is available at
http://jsc-aircraft-ops.jsc.nasa.gov/WB57/contact.html

If sponsored by NASA, the principal investigator must also complete a formal Flight Request (FR) via the Science Operations Flight Request System (SOFRS). The FR must be submitted at least **six months** prior to flight. Visit the following link: http://airbornescience.nasa.gov/sofrs/. After processing at NASA Ames Research Center, the FR will be relayed to the WB-57 Program Office. The FR is valid for five years from the date signed. An approved FR is required before the payload can be flown.

The FR contains general information describing the following:

- Science objectives
- Desired schedule (exact flight dates will be determined later) and location
- Brief description of the scientific instruments and associated equipment
- Special support required or constraints, including security classification of project, if applicable
- Preliminary hazard analysis identifying hazards and controls (any format is acceptable)
- Data requirements from the WB-57
- Names, addresses, and phone numbers of contacts

The WB-57 Program Office will work with the principal investigator or project manager to establish experiment manifests for individual flight weeks.

Funding

The WB-57 Program is a cost-reimbursable program. All payloads that fly on the WB-57 must be funded through direct transfer of funds between the organization conducting the research and NASA JSC. Foreign government organizations requesting flight time on the WB-57 must have a Memorandum of Understanding (MOU) with NASA Headquarters prior to flight. Supplementary support required from NASA (i.e., overtime hours, deployment expenses) will be figured into the total cost of a WB-57 mission as an additional expense. Cost estimates can be provided by the WB-57 Program Office upon request.

6.1.2 Payload Information Form

A Payload Information Form (PIF) is required for each payload on the WB-57. It provides preliminary information only and should be submitted to the WB-57 Program Office as early as possible to provide awareness of researcher intent and requirements, and to initiate coordination with AOD Engineering Branch. The PIF is a basis for planning and is not intended to reflect final design, components, operation, etc. The current PIF is available at the following link from the WB-57 website:

http://jsc-aircraft-ops.jsc.nasa.gov/wb57/firststeps.html

6.1.3 Payload Data Package

A Payload Data Package (PDP) is required for each payload on the WB-57. This package must provide detailed documentation of the payload and address all aspects of its design and operation. The PDP will be submitted to the WB-57 Program Office no later than **six weeks** prior to flight to allow time for thorough review prior to the Test Readiness Review (TRR). Late submissions may necessitate a one-day slip to the flight schedule for each day late. Refer to Appendix B for detailed PDP requirements.

6.1.4 Drawing and Other Technical Data

The WB-57 website contains drawings and other technical data for payload mounting locations at the following link:

http://jsc-aircraft-ops.jsc.nasa.gov/WB57/designintegration.html

The overall layout schematic for aircraft payload electrical interface is available at: http://jsc-aircraft-ops.jsc.nasa.gov/WB57/designaids.html

Please contact the WB-57 Program Office to inquire about other drawings or technical data.

6.1.5 Hazards

The use of hazardous materials should be avoided or minimized when possible. If the use of hazardous materials is required, refer to Section 7.7 for guidelines.

6.1.6 Aircraft Personnel

A. Payload Integration Project Manager

WB-57 Program Office representative who serves as the primary liaison between the payload customer, Engineering, Maintenance, Flight Operations, Aviation Safety, and Quality Assurance organizations at JSC AOD, and other organizations as required, to ensure safe and successful payload development and integration onto the WB-57 aircraft. This individual will be the customer's primary point of contact until payload integration is complete. It is beneficial to maintain frequent communications with your payload integration project manager to identify and resolve potential problem areas as early and as smoothly as possible.

B. Mission Manager

WB-57 Program Office representative who manages WB-57 deployments and flight operations. The Mission Manager may also serve as a SEO, Maintenance Team Lead, etc. This individual will be the customer's primary point of contact once payload integration is complete and flight operations begin (whether deployed or at EFD).

C. Project Pilot

AOD Flight Operations Branch representative who coordinates flight scheduling, crew training, and other WB-57 operational issues with crewmembers, mission managers, etc.

D. Project Engineer

AOD Engineering Branch representative who coordinates all engineering activities relative to the WB-57.

E. Maintenance Team Lead

Contractor Maintenance representative who coordinates all maintenance activities relative to the WB-57.

6.2 Certifications, Reviews, and Approvals

A. Airworthiness and Flight Safety Review Board (AFSRB)

Not applicable (N/A) to the WB-57.

B. Airworthiness Review

The Airworthiness Review (AR) is an internal AOD Engineering peer review meant to ensure the payload's readiness for a safe and successful flight. The

review will address all engineering elements presented in the TRR or Flight Readiness Review (FRR). Successful completion of the AR means that the project can progress to the TRR or FRR.

C. Test Readiness Review

A TRR is required for all new and modified payloads flown on the WB-57. The TRR is the final safety review prior to flight for test articles and other payloads. It includes a complete review of supporting documentation, an inspection of the payload, and a final verification of flight readiness. Refer to Section 8.3 for details.

D. Flight Readiness Review

An FRR is required if payload integration incorporates major modifications to the WB-57 aircraft itself. The FRR certifies that the aircraft is safe to fly its intended mission. (A TRR is sufficient for payloads that are conducted within the confines of the aircraft including minor protrusions outside of the aircraft that do not significantly affect drag.)

E. Operational Readiness Review

An Operational Readiness Review (ORR) is required for all significant aircraft operations to include WB-57 deployments (i.e., flight ops away from EFD). The ORR should describe all aspects of the intended mission including planning for reasonable contingencies. An approved ORR certifies that the intended mission has been properly planned.

6.3 Aircraft Integration

Payloads proposed for flight on the WB-57 should consider provisions for safe and efficient aircraft integration operations. All payloads must be designed to fit, without aircraft interference, into their designated location on the aircraft, and must meet all design guidelines specified in this handbook (e.g., structural, electrical). Accurate weight and CG locations must be determined for all payloads, and provisions made for service coils (slack) for electrical connections and/or overboard vent lines.

6.4 Schedules and Timelines

This simplified, generic timeline has been designed to assist researchers with the timely submittal of required documentation to ensure successful payload integration. All times are prior to first flight unless otherwise noted. Depending on specific circumstances, the actual timeline may range anywhere from two years or more to six months or less.

A. 1+ Year

Contact the WB-57 Program Office to make initial inquiry about the feasibility of flying a payload on the WB-57. For very complex payloads, inquiries should be made further in advance.

B. 11 Months

Submit PIF (refer to Section 6.1.2).

C. 10 Months

Submit Flight Request via SOFRS (for NASA-sponsored payloads only) (refer to Section 6.1.1).

D. 8 Months

Submit Operation and Configuration Control Plan (OCCP) request for pressure/vacuum systems (if applicable) (refer to Section 7.5.1).

E. 6 Months

Submit JSC Form 44A, Radio Frequency/Microwave Evaluation Data and/or JSC Form 44B, Laser Devise Use Request/Authorization (if applicable) (refer to Section 7.7.1 and Section 7.7.4).

F. 3 Months (prior to arrival)

Submit badging request for foreign nationals (if applicable) (refer to Section 9.4).

G. 6 Weeks

Submit final, signed PDP (refer to Section 6.1.3 and Appendix B).

H. 3 Weeks

Submit TRR checklist (refer to http://jsc-aircraft-ops.jsc.nasa.gov/WB57/datapackage.html).

I. 2 Weeks (prior to arrival)

Submit badging request for all U.S. citizens and permanent resident aliens (if applicable) (refer to Section 9.4).

J. 3 Days – 2 Weeks

Ensure payload hardware arrives at EFD and is installed on the WB-57. Complete electrical and control checkouts. Coordinate with SEO to finalize payload operation checklist (refer to Section 6.4.1 and Section 7.1).

K. 1 – 3 Days

Participate in TRR. Complete any resulting action items (if applicable) (refer to Section 8.3).

L. 0 Days

Go Fly! (refer to Section 8.1.)

6.4.1 Arrival at Ellington Field

Payloads and equipment should be received at JSC EFD in a timely manner to allow for unpacking, assembly, weighing, aircraft installation, electrical checkout, and TRR. The address to use for shipping is:

NASA/CSC
WB-57 Program Office
Attn: POC Name/POC Phone #
Building 270, Ellington Field
Houston, Texas 77034

With prior coordination, larger shipments can be sent directly to Hangar 990 or Building 994 (refer to Section 9.1.3). During your time at EFD, it is recommended that smaller shipments be shipped to your hotel if possible. NASA's shipping and receiving department has limited hours.

The assembly of instrumentation is solely the responsibility of the researcher. The WB-57 Program Office provides toolboxes with standard tools in English and metric units. The researcher must provide special tools and checkout equipment.

6.4.2 Departure from Ellington Field

After final flight at EFD, payloads will be offloaded and prepared for shipment by the user. It is the researcher's responsibility to ensure that all payloads and ground equipment used for the mission (including compressed gas cylinders, chemicals, packing, crating, etc.) are removed promptly from Building 994 and Hangar 990. It is also the responsibility of the user to make arrangements for the shipment of all equipment. Be sure to advise your shipper that pickups must be made no later than 3:15 p.m. Central Standard Time (CST), Monday thru Friday only.

Customer feedback received concerning the facilities, staff, and the WB-57 Program is greatly appreciated. Customer feedback enables us to better serve you and other customers.

7.0 PAYLOAD DESIGN AND FABRICATION REQUIREMENTS

This section provides a detailed description of payload design specifications that must be met before a payload is approved for flight on the WB-57. Retain all documentation throughout the design process so that it may be presented later in the flight approval process. The safety guidelines presented in this section are the minimum required. We encourage you to take steps to exceed these guidelines when practical, while keeping overall payload weight and drag to a minimum. In the absence of specific guidance in this document, it is recommended that appropriate sections of Federal Aviation Administration (FAA) Advisory Circulars 43.13-1B/2A, Acceptable Methods, Techniques, and Practices – Aircraft Inspection, Repair, and Alterations, be adhered to whenever possible during payload design and fabrication to ensure safety and compliance with common aerospace industry standards.

NOTE

Payloads that were flown on the NASA WB-57 under previous versions of this document are grandfathered under their original design criteria and approved configuration. All new payloads and payloads modified since last flight shall comply with the contents of this handbook.

7.1 Flight Safety

Safety of the aircraft, flight crew, and ground personnel is paramount during all aspects of payload design, integration, and operations.

The flight crew for the WB-57 is made up of the Pilot (front seat) and SEO (back seat). The pilot is responsible for flying the aircraft (including navigation, radio, and system diagnostic responsibilities) during all phases of a flight. The pilot is ultimately responsible for the safety of the crew and aircraft and has the final say as to whether or not the flight will proceed.

The SEO is responsible for the safe operation of all payloads on the WB-57 as well as some navigational and pilot assistance responsibilities. The SEO, in coordination with the pilot, has the authority to shut down all payloads for safety of flight issues. Payload operation checklists will be generated and certified for flight through regularly scheduled briefings attended by the researcher, pilot, and SEO. Deviations from the payload operation checklist are allowed to address issues pertaining to the overall safety of the flight.

Payload Fail-Safing

All equipment will be designed so that in the event of payload power loss (expected or unexpected), power surge, rapid depressurization, fluid leak, fire, etc., the payload will fail to a safe configuration and there will be no chance of inducing another hazardous situation.

Researchers shall coordinate with the WB-57 Program Office to develop appropriate emergency procedures in checklist format for payload fail-safing. WB-57 aircrew members will be trained on how to fail-safe the payload so they are able to safely and efficiently initiate emergency procedures when required.

7.2 Mechanical Systems

7.2.1 Loads and Structures

WB-57 payloads must comply with the following structural design requirements and provide documented proof of compliance via the PDP (refer to Section 6.1.3 and Appendix B). Structural designs should allow for ease of aircraft integration, payload maintenance, and replacement of components, when required. All hardware shall be designed for aircraft installation with enough clearance to avoid the risk of damaging aircraft structure (i.e., 1 inch from moving or critical surfaces, 1/2 inch from static surfaces). Hardware shall also be designed to be compatible with standard materials

handling equipment and procedures. Equipment that is manually handled (handles, lifting bars, points, etc.) shall be designed so that no person lifts more than 50 pounds.

Structures are to be designed with both limit and ultimate load cases in mind. Limit and ultimate loads for the WB-57 are defined as follows:

A. Limit Loads

Limit loads are defined as the maximum loads anticipated on the aircraft during its lifetime of service. These loads are typically based on the maximum accelerations the aircraft is expected to experience during operation. The structure shall be able to support limit loads without detrimental permanent deformation.

For externally mounted payloads, aerodynamic loads shall be combined with the inertial limit loads.

NOTE

Limit loads are calculated by dividing the ultimate loads by a factor of 1.5.

B. Ultimate Loads

Ultimate loads are defined as the limit loads multiplied by a **Factor of Safety (FS) = 1.5**. The structure must be able to support ultimate loads without failure for at least three seconds. Ultimate load factors are listed in Section 7.2.1.1. For example, payloads mounted in a pallet must be able to withstand 3 g's in the forward direction, 1.5 g's in the aft direction, etc. Each load direction should be analyzed independent of the other load cases.

7.2.1.1 Ultimate Load Factors

All structures, attachments, and fasteners for equipment installed in the aircraft shall be designed to withstand the load conditions listed below. These load factors, when applied one at a time, shall not produce a stress in any structural element beyond the accepted ultimate strength of the construction material. See Figure 24 for loading directions.

- Forward: 3.0 g's (ultimate)
- Aft: 1.5 g's (ultimate)
- Up: 3.0 g's (ultimate)
- Down: 6.1 g's (ultimate)
- Lateral: 1.5 g's (ultimate)

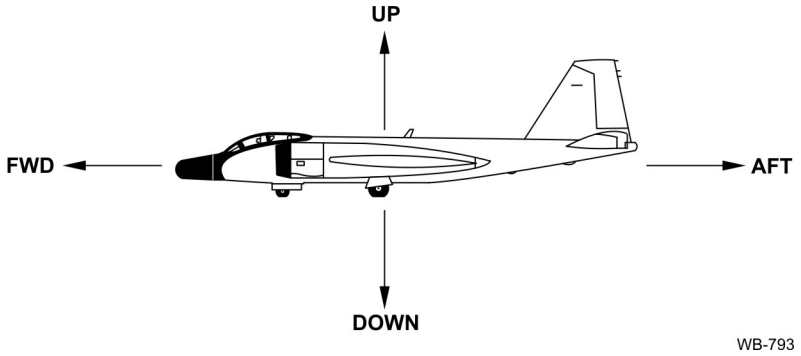

Figure 24. WB-57 Axis Configuration for Ultimate Loads

7.2.2 Inlet Systems

There are no standard inlets on the WB-57 aircraft. There are existing provisions for inlets on pallets. Inlets may be added to other payload locations with WB-57 Program Office approval.

7.2.3 Fasteners

Fasteners utilized in structural designs shall be of an aerospace grade (AN, MS, NAS) or equivalent, and shall possess documented fastener strengths. Common fasteners used in payload structures include bolts, screws, rivets, and nut plates. Proper fastener installation will be practiced at all times by using correct fastener sizes, spacing [e.g., edge distance (E/D) no less than 2.0], torque loads, locking hardware (e.g., safety wire, locking nut plates, locking helicoils, lock nuts), and rivet bucking procedures

NOTE

Number 8 size threaded fasteners (or smaller) are not considered sufficiently sized fasteners for structural purposes.

Only use #10 size (0.190 inches in diameter) or larger fasteners when selecting fasteners for load bearing structure. Threaded fasteners shall have threads engaged sufficiently. This requires at least two threads to be visible beyond the locking nut or nut plate. If more than four threads are exposed, a shorter grip length should be selected.

The following applies to fasteners used in safety critical joints. A safety critical joint is defined as a joint whose failure could result in a catastrophic hazard such as critical damage to the aircraft or injury to personnel.

- Fasteners shall be properly torqued using calibrated tools.
- Fully threaded fasteners (threads in the shear plane) shall not be used. Fasteners shall be sized to allow for an unthreaded shank in the shear plane.

- Fasteners must include a self-locking feature or be safety wired. Lock washers shall not be used.
- The use of locking or staking compounds such as threadlocking adhesives or epoxy staking compounds is not recommended. Proposed applications that use these compounds in safety critical joints must include a detailed analysis verifying their use and be approved by AOD Engineering.

7.2.4 Welding

Structural welds shall be performed in accordance with AWS D17.1, Specification for Fusion Welding for Aerospace Applications. The structural analysis for the hardware must consider the new material properties in the heat-affected zone (HAZ). The HAZ is the area of base material which has had its microstructure and properties altered by welding or heat intensive cutting operations. The heat from the welding process and subsequent re-cooling causes this change in the area surrounding the weld. The extent and magnitude of property change depends primarily on the base material, the weld filler metal, and the amount and concentration of heat input by the welding process.

7.3 Electrical Systems

7.3.1 Wiring

All electrical wiring and interconnect cabling shall be fabricated and installed in accordance with SAE AS50881, Wiring Aerospace Vehicle, T.O. 1-1A-14, Technical Manual, Installation and Repair Practices, Aircraft Electric and Electronic Wiring, and/or the current version of JPR 1700.1, JSC Safety and Health Handbook, as applicable. Wire types shall be in accordance with NASA Drawing 8593003, Wire, Electric, Interconnection, and Hookup. Contact the WB-57 Program Office for copies of these documents.

Materials or insulation that are flammable, produce smoke, or emit toxic fumes when exposed to a combustible or high-temperature environment shall not be used in payload assemblies. The following materials are not acceptable for use in payloads to be carried aboard the WB-57:

- Polyester
- Nylon
- Polyvinyl Chloride (PVC)
- Polyethylene (PE)
- Polypropylene
- Polyurethane
- Kapton (polymide resin)

7.3.2 Cabling

All electrical aircraft interface cables shall have a descriptive tag secured to each end with information to include the payload name and cable number. All cables within the payload shall be adequately restrained and clamped, and electrical insulation shall be protected against abrasion and chafing. Customers are responsible for providing all payload electrical cables that interface with the aircraft. As a general rule, electrical interface cables for pallet payloads should be about 15 feet long to allow for installation in any of the four pallet positions.

7.3.3 Connectors

Connectors shall be suitable aircraft-type connectors. Where suitable aircraft-type connectors cannot be used, the connector shall be mechanically secured to prevent un-mating due to aircraft vibrations.

7.3.4 Circuit Protection

Circuit breakers shall be in accordance with SAE AS50881. The payload shall be self-protected with an incorporated circuit breaker or other current-limiting device. Any exposed metal surfaces shall be adequately grounded to prevent electrical shock.

7.3.5 Batteries and Uninterruptible Power Supplies

The payload shall have emergency shutdown capabilities to completely deenergize the entire payload including backup power systems such as batteries or uninterruptible power supplies (UPS).

Small numbers of AA or D type alkaline or "button" Ni-Cad batteries can be used without special approval. All other battery usage on the aircraft requires approval of the WB-57 Program Office. Whenever possible, select benign battery chemistries with hermetically sealed cell designs from the following:

- Alkaline (Zn/MnO2)
- Silver-Zinc
- Nickel Cadmium
- Sealed Lead Acid (starved electrolyte or immobilized electrolyte type)

Batteries shall be of the dry cell or gel-cell type. Liquid electrolyte batteries are not allowed on the aircraft. Recharging in flight is not permitted for non-aircraft batteries.

7.3.6 Motors and Pumps

The usage of 400 Hz motors is preferred as such motors do not introduce starting transient loads on the 60 Hz power converters employed on the aircraft. Larger motors (e.g., those used in vacuum pumps) shall be protected by a thermal overload device. Additionally, single-phase motors must be equipped with solid state switches to inhibit arcing at the contacts during start up. In the absence of arc suppressors, motors must be

shown to be spark free during operation. Motors that are rated as explosion-proof or totally enclosed and non-ventilated are recommended for use on the aircraft.

7.3.7 Power Distribution

Total electrical power loads (including peak, or in-rush currents) shall be calculated and electrical power requirements coordinated with the WB-57 Program Office.

7.3.8 Electromagnetic Interference

All electrical components on payloads should meet reasonable requirements for Electromagnetic Interference (EMI) transmission and EMI susceptibility. Treat equipment generating radio frequency (RF) energy between 30 Hz and 30,000 MHz as a cause of interference unless you provide the equipment with power line filters, shielding, bonding, and grounding. Any experiment determined to be interfering with other experiments or aircraft instrumentation systems during any phase of flight will be powered down. Experiments may also be powered down to help troubleshoot an EMI problem.

7.4 Materials

7.4.1 Metallic

Materials used in a payload structural design must have documented allowable strengths. Typical materials used in structural design are aluminum, steel, and stainless steel.

7.4.2 Non-Metallic

If non-metallic materials are utilized, some restrictions apply. Researchers must provide documentation (usually the material spec sheet) that the non-metallic items are non-flammable and that they will not support combustion. The researcher is also required to supply the WB-57 Program Office with Material Safety Data Sheets (MSDS), via the PDP (refer to Appendix B), for the non-metallic materials being used. Glass or plastic windows or panels require a higher factor of safety than metal components. Contact the WB-57 Program Office for further information.

7.4.3 Hazardous Material

Hazardous material (HAZMAT) is defined as anything with a flashpoint below 140°F or with a threshold limit value (TLV) below 500 parts per million (ppm), below 500 Milligrams per Cubic Meter (mg/M3) for fumes, below 10 mg/M3 for dust, or with a single oral dose (if liquid) at 50 percent lethality below 500 Milligrams per Kilogram (mg/Kg). As a note, materials with flash points at or above 100°F are considered combustible; flash points below 100°F are considered flammable. If possible, avoid the use of hazardous materials including high pressure, toxic, corrosive, explosive, flammable, and combustible materials. If such materials are required, whether in-flight or on the ground, proper containment and hazard controls shall be provided. Early contact with the WB-57 Program Office for discussions on proper hazard controls and

containment of proposed hazardous materials may prevent delays in getting approval for the use of such materials. If such materials are necessary, provisions for dumping and purging in flight may be required. A current MSDS shall be supplied for each hazardous material via the PDP (refer to Appendix B). It is the researcher's responsibility to store hazardous materials as specified in the MSDS, and to provide and use appropriate Personal Protective Equipment (PPE) as per the MSDS.

7.5 Pressure and Hydraulic Systems

7.5.1 Pressure/Vacuum Systems

All pressure/vacuum systems proposed for flight and/or ground use must comply with the JPR 1710.13, Design, Inspection, and Certification of Pressure Vessels and Pressurized Systems. Contact the WB-57 Program Office for a current copy. An OCCP will likely be required depending on the type of pressure/vacuum system proposed. Instructions for requesting an OCCP can be found at the following link: http://jsc-aircraft-ops.jsc.nasa.gov/WB57/datapackage.html. The OCCP is completed and approved by the JSC Structural Engineering Division based on the customer request, and an approved OCCP is required prior to testing or use of the system on the WB-57. Coordination with the WB-57 Program Office early in the design process will facilitate approval of the pressure/vacuum system and prevent potential redesign.

NOTE

Sealed Containers do not require an OCCP but must still be documented in the PDP. To be approved as a Sealed Container, the following requirements must be met:

- Item is a single, independent container, component or housing that is not a part of a/the pressure system.
- Container is not vented or actively pressurized.
- Leakage of the fluid is non-hazardous.
- Loss of pressure in the container will not pose a hazard to continued operation of the aircraft or result in a catastrophic event.
- Container Maximum Operating Pressure (MOP) is less than 100 pounds per square inch absolute (psia).

- The stored energy of the container must be less than 14,240 foot-pounds (ft-lb) based on adiabatic expansion of a perfect gas. The contained energy of the container is calculated using the following equation at the highest pressure differential to be seen during operation:

$$E = \frac{P_i V}{K - 1} \cdot \left(1 - \left(\frac{P_e}{P_i} \right)^{\left(\frac{K-1}{K} \right)} \right)$$

Where:

E = container stored energy [inch-pounds (in-lb)]

P_i = internal pressure (psia)

P_e = external pressure (psia)

V = internal volume [cubic inch (inch^3)]

K = ratio of specific heats constant pressure/constant volume (C_p/C_v) (1.4 for air)

7.5.2 Purge/Vent Systems

An overboard vent line is available in the WB-57 pallet bay. The manifold fittings on the multi-user vent line are female (internally threaded) 3/8 inch National Pipe Thread (NPT) fittings. Researchers must provide a suitable type and length of hose to reach the manifold from their pallet integration location. Service coils (slack) must be figured into the length of the hose for ease of payload integration and maintenance. Requests for use of the overboard vent system shall be made by contacting the WB-57 Program Office. It is required that the chemical composition, physical characteristics, and quantity of the vented gas be entirely known and documented by the researcher, and that no liquid be present in the vented gas line for "freeze-up" purposes. It is the responsibility of the researcher to inform the WB-57 Program Office, via the PDP (refer to Appendix B), of all possible hazards associated with the vent gas, along with mitigation and potential interaction. This includes, but is not limited to, the possibility of freeze-up, blockage, ignition, corrosion, and chemical reaction with other agents that could be introduced by another payload on the same vent line.

7.5.3 Cylinders

For pressure vessel requirements, it is recommended that Type I (all metal) cylinders be used whenever possible. Metal cylinders must be Department of Transportation (DOT) approved. Composite Overwrapped Pressure Vessels (COPV) are susceptible to impact damage and require detailed visual inspection by a trained visual inspector. COPVs therefore have specific inspection, installation, and documentation requirements, but may be used if desired or if weight is an issue. All COPVs require a protective cover to guard against damage during maintenance activities (e.g., dropped tools). DOT/NGV2

COPVs will be required to meet FMVSS 304, Compressed Natural Gas Fuel Container Integrity, requirements for inspection and NFPA 52, Vehicular Fuel Systems Code, for installation, at a minimum. Any flight weight COPVs will require adherence to the ANSI/AIAA S-081/A, Space Systems-Composite Overwrapped Pressure Vessels, standard and Damage Control Plan approval by the JSC Fracture Control Board. All cylinders shall have proof of current inspection. Please contact the WB-57 Program Office for further information regarding pressure vessel usage.

7.6 Thermal

7.6.1 Temperature Limits

Payloads utilizing heaters or other heat producing devices shall maintain a touch temperature of no greater than 130°F (54°C). Guards or other protection measures will be employed for research hardware where the touch temperatures are greater than 130°F. Cold surface temperatures shall also be guarded if below 32°F (0°C).

7.6.2 Control

While there is limited capability for SEO thermal control of payloads, in general, overall payload thermal control should be autonomous, requiring no SEO monitoring or input. Indication of an off-nominal thermal condition shall be provided to the SEO. Provisions shall be provided for the SEO to shut down a portion of or all of a payload, as required, in the event of an off-nominal condition.

7.6.3 Heaters

It is possible to install heaters in payload locations to help moderate payload temperature. It is also possible for external heating to be supplied to payload locations on the ground. Heater provisions are the responsibility of the payload customer. Heaters shall not be in contact or in close proximity with any materials that could be a fire hazard.

7.6.4 Chillers

It is possible to install cooling systems in payload locations to help moderate payload temperatures. It is also possible for external cooling to be supplied to payload locations on the ground. Chiller provisions are the responsibility of the payload customer.

7.7 Hazards

7.7.1 Lasers

All lasers proposed for flight and/or ground use must comply with JPR 1700.1. There is a specific chapter for laser safety and health. All Class 3A and higher lasers must be registered and approved for use with JSC Form 44B. JSC Form 44B may be found at the following link: http://jsc-aircraft-ops.jsc.nasa.gov/WB57/datapackage.html.

JPR 1700.1 is available at: http://jschandbook.jsc.nasa.gov/.

7.7.2 Gases

All compressed gases used, either in-flight or on the ground, must be documented in the PDP and accompanied by an MSDS.

7.7.3 Cryogens

All cryogens proposed for flight and/or ground use must comply with JPR 1700.1. There is a specific chapter on working safely with cryogenic fluids. JPR 1700.1 is available at: http://jschandbook.jsc.nasa.gov/.

7.7.4 Radiation Sources

All radioactive materials or radiation-producing equipment proposed for flight and/or ground use must comply with the JPR 1700.1. There is a specific chapter on radiation protection, including both ionizing and non-ionizing radiation. Depending on the situation, authorization for use may be required from the JSC Radiation Safety Committee. Radio Frequency (RF) transmitters such as radar systems must be registered and approved for use with a JSC Form 44A. JSC Form 44A may be found at the following link:

http://jsc-aircraft-ops.jsc.nasa.gov/WB57/datapackage.html.

JPR 1700.1 is available at: http://jschandbook.jsc.nasa.gov/.

7.7.5 Other

Fluids approved for flight on the WB-57 must be contained in a system that is structurally capable to withstand design and ultimate loads specified in Section 7.2.1. Hardware used to contain fluid must be designed with suitable provisions for leak control to ensure a leak free system during ground and flight operations. In the event of payload power loss, power surge, rapid depressurization, etc., all hardware must fail to a mode allowing for sound fluid containment. If fluid is drained to an ambient pressure reservoir during flight operations, fluid absorption methods must be installed to eliminate the chance of leaks through loose seals. If possible, avoid the use of toxic, corrosive, and explosive fluids. An MSDS must be submitted via the PDP (refer to Appendix B) for all fluids other than water.

All hard and sharp edges that could conceivably by accessed by voluntary or involuntary contact shall be guarded.

Any frangible items [i.e., glass, cathode ray tubes (CRT), gauges, windows, or other objects that are susceptible to shattering] will be entirely contained to prevent injury or Foreign Object Debris (FOD) damage.

7.8 Access, Egress, and Physical Integration

Access to the aircraft is controlled. An AOD employee or contractor must accompany anyone requiring access to the aircraft. The Payload Integration Project Manager or Mission Manager will advise when the aircraft is available for payload integration or testing. Special qualifications are required for access to the cockpit (front or rear seat) due to safety hazard posed by ejection seats.

8.0 FLIGHT OPERATIONS

8.1 Operational Scenarios (Flight Hours and Duty Days)

The crew duty day for WB-57 crewmembers is 12 hours. The standard crew rest period prior to flight is 10 hours. Crewmembers must wear a full pressure suit for flights above 50,000 feet (high flights). After a high flight of 5.5 hours duration or longer, 30 hours crew rest is required before another high flight can be flown. If high flights are scheduled every day, two crews will generally be required.

Researchers shall coordinate with the SEO to develop an effective flight crew checklist to operate each payload. Researchers shall also establish proper security protocols for payload ground handling, in-flight operation, and data processing during normal operations and possible aircraft emergency divert situations.

One to two days prior to the flight, a list of the payloads to be flown and an operational checklist will be posted. All checklist changes must be marked by noon on the day prior to the flight. Prior to all flights, the mission researchers and flight crew will attend a pre-flight brief. The briefing will cover the flight plans, meteorology, go/no-go criteria, contingency plans, etc.

The standard pre-flight timeline for both low and high flights is shown below.

A. Low Flight (at or below 50,000 ft.)

T-4 hours: Maintenance Preparation of Aircraft

T-3 hours: Researcher Payload Time with Aircraft

T-2 hours: Researcher Hands Off; Maintenance Tow Out and Fueling

T-1.5 hours: Pre-flight Briefing

T-1 hour: Aircrew Pre-flight

T-0 hours: Aircraft Takeoff

B. High Flight (above 50,000 ft.)

T-5 hours: Maintenance Preparation of Aircraft

T-4 hours: Researcher Payload Time with Aircraft

T-3 hours: Researcher Hands Off; Maintenance Tow Out and Fueling

T-2.5 hours: Pre-flight Briefing

T-2 hours: Aircrew Pre-flight

T-1 hour: Aircrew Pressure Suit-up

T-0 hours: Aircraft Takeoff

8.2 In-flight Activities and Protocols

Aircrew may contact ground personnel via aircraft radios or satellite phone if there are any problems or questions regarding instrumentation. At times, this communication may not be available; therefore, researchers should take care to properly convey all failure procedures to the SEO.

8.2.1 Post-Flight

A post-flight debriefing will be held immediately after landing to review all aspects of the flight. This review includes the profile executed, general payload operation information, and/or any anomalies that occurred during the flight.

Payloads should be offloaded from the WB-57 for data processing immediately after the aircraft is towed into the hangar. Take care to ensure your payload is removed from the aircraft according to your wishes prior to the departure of the ground crew.

8.3 Testing (TRRs)

The TRR is the final safety review of a payload prior to its flight. It includes a complete payload review of supporting analyses and documentation, an inspection of the payload hardware, and a final integrated verification of flight readiness. The PDP is the primary source of payload documentation and will be provided to the WB-57 Program Office no later than **six weeks** prior to flight to allow sufficient time for review. Late submissions may necessitate a one-day slip to the flight schedule for each day late. Refer to Section 6.1.3 and Appendix B.

A TRR is required for **all** new and modified payloads. For payloads that have flown previously on the WB-57 but have been modified since the last TRR, the TRR will take the form of a delta TRR. The delta TRR will focus only on the changes to the payload since the last TRR. Modifications to the payload from its previous approved and flown configuration shall be documented in a revision to the PDP. Ideally, PDP Revision A documents delta TRR #1, PDP Revision B documents delta TRR #2, etc. The revised PDP shall clearly show the differences between the "old" and "new" configurations to include components, mounting hardware, power requirements, weights, etc. The revised PDP will be provided to the WB-57 Program Office no later than **six weeks** prior to flight to allow sufficient time for review.

The TRR will normally be conducted at EFD in Building 994 or Hangar 990 one to three working days prior to the first flight. Occasionally, the TRR may be conducted up to several weeks prior to first flight depending on the circumstances. Researchers are required to attend the TRR and may be required to operate their equipment during

the TRR. During the TRR, each payload will be "approved," "approved pending corrections indicated," or "not approved" for flight. A unanimous decision from the reviewers is required for flight approval. Payloads that have not been approved may be scheduled for a subsequent review when deficient areas have been corrected.

A checklist for specific items that will be addressed at each TRR can be found at http://jsc-aircraft-ops.jsc.nasa.gov/WB57/datapackage.html. Researchers will be required to complete and sign this checklist for their payload prior to each TRR or delta TRR. Researchers are encouraged to review and incorporate this checklist at the start of payload design to help ensure a successful TRR.

8.4 Flight Safety

8.4.1 Access/Egress

N/A. Researchers do not fly aboard the WB-57.

8.4.2 Specialized Safety Equipment

N/A. Researchers do not fly aboard the WB-57.

8.4.3 Tool Control

N/A. Researchers do not fly aboard the WB-57. Refer to Section 9.3 for tool control during ground operations.

8.4.4 Personnel Training and Certification

N/A. Researchers do not fly aboard the WB-57.

8.5 Field Deployments

The primary operating location for the NASA WB-57s is EFD in Houston, Texas. If necessary, the WB-57 can be deployed to both domestic and international locations. A site survey will be performed by the WB-57 Program Office to assess remote site support facilities, logistics support, runway parameters, meteorological/operational issues, and if located outside the U.S., foreign government permission. Export control laws will need to be addressed for foreign deployments. Contact the WB-57 Program Office with any inquiries about remote site deployments. See Figure 25 and Figure 26 for some examples of remote sites where the WB-57 has been deployed in the past.

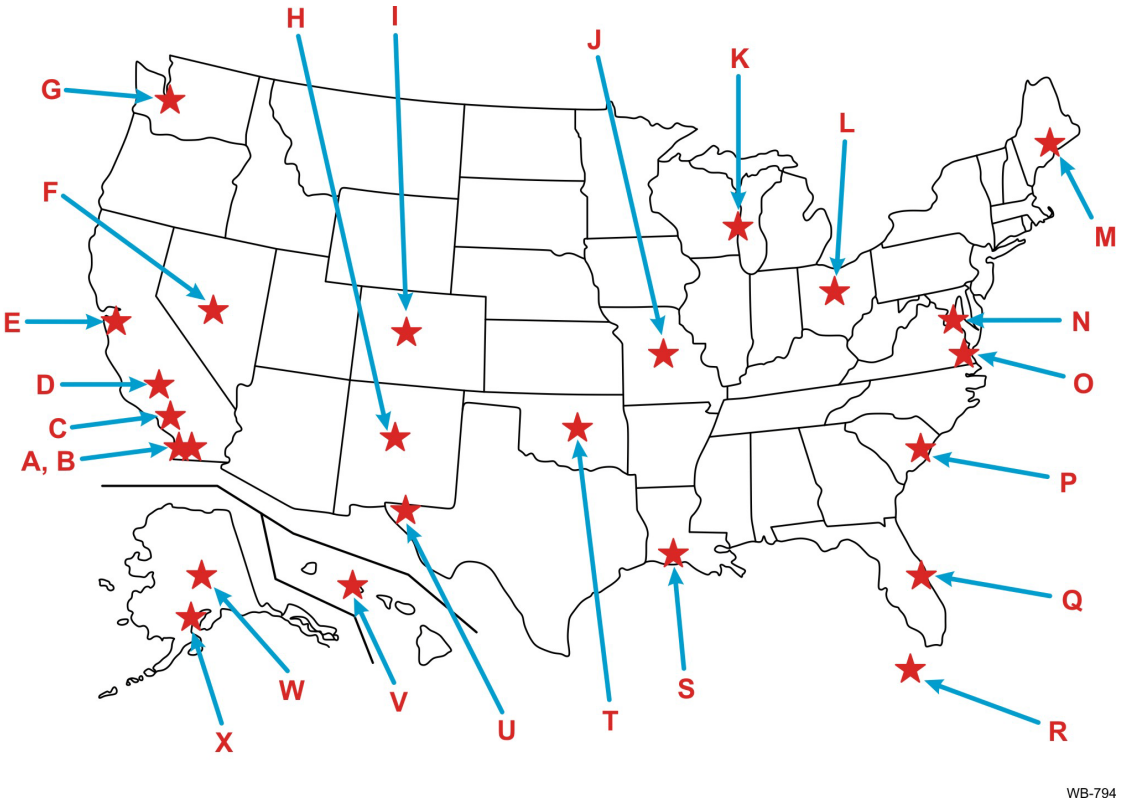

A. Naval Air Station North Island, CA

B. Marine Corps Air Station Miramar, CA

C. March Air Reserve Base, CA

D. Edwards Air Force Base, CA

E. NASA Ames Research Center, CA

F. Nellis Air Force Base, NN

G. McChord Air Force Base, WA

H. Kirtland Air Force Base, NM

I. Denver International Airport, CO

J. Whiteman Air Force Base, MO

K. Milwaukee, WI

L. Wright-Patterson Air Force Base, OH

M. Bangor, ME

N. Andrews Air Force Base, MD

O. NASA Langley Research Center, VA

P. Charleston Air Force Base, SC

Q. NASA Kennedy Space Center, FL

R. Naval Air Station Key West, FL

S. Lake Charles, LA

T. Tinker Air Force Base, OK

U. El Paso, TX

V. Hickam Air Force Base, HI

W. Eielson Air Force Base, AK

X. Elmendorf Air Force Base, AK

Figure 25. Domestic Deployment Sites

A. Montevideo, Uruguay

B. Bogota, Colombia

C. Panama City, Panama

D. San Jose, Costa Rica

E. Soto Cano, Honduras

F. Ottawa, Canada

G. Keflavik, Iceland

H. Rota, Spain

I. RAF Mildenhall, United Kingdom

J. Souda Bay, Greece

K. Kwajalein Atoll, Marshall Islands

L. Kandahar, Afghanistan

M. Al Udeid, Qatar

N. Bamako, Mali

Figure 26. International Deployment Sites

9.0 GROUND OPERATIONS

9.1 Facilities

Hangar 990 at EFD is the home of the WB-57 aircraft and the WB-57 Program Office. Parking for all NASA facilities in the vicinity of Hangar 990 is located in the lot across the street from the pedestrian gate at the north end of Hangar 990. Visitors will not drive or park inside the fence.

Building 994 (see Figure 27), on the flightline side of Hangar 990, provides visiting researchers with a payload lab area that is generally available 24/7 (see Figure 28). This air-conditioned workspace is available for payload assembly and checkout. The building is equipped with workbenches, phones/fax, and computer network drop lines for researcher use. It also has a small conference room. Access to Building 994 includes a 12 ft x 12 ft roll-up door. The following power options are available:

115 Vac – 60 Hz, single phase, 20 amps

115 Vac – 60 Hz, single phase, 30 amps

115 Vac – 400 Hz, 3 phase, 20 amps

208 Vac – 60 Hz, single phase, 20 amps

208 Vac – 60 Hz, three phase, 60 amps

460 Vac – 60 Hz, three phase, 50 amps

28 Vdc, 20 amps

NOTE

Building 994 does not have a vent hood for the mixing of chemicals inside the building.

WB-796

Figure 27. Building 994 WB-57 Payload Laboratory

WB-797

Figure 28. Building 994 High Bay Work Area

9.1.1 Building 994 Computer Network Access, Printers, and Phones

Researchers should plan to bring their own laptops. Multiple network drops are available at each workstation and in the conference room. Wi-Fi™ access is also available. Contact the WB-57 Program Office to arrange a JSC guest account for Wi-Fi. Printer access can be arranged. Phones are located throughout Building 994. Incoming calls or faxes for the researcher should use the following numbers:

High Bay: 281-244-9629
Small Lab: 281-244-9684
Conference Room: 281-244-9026
Fax: 281-244-9788

9.1.2 Payload Equipment and Material Storage

Limited storage space is available. Requests for space must be prearranged with the WB-57 Program Office. Limited chemical storage is available in the payload lab area. Storage and customer work areas are secured.

9.1.3 Shipping and Receiving

The address for shipping payload hardware is:

NASA/CSC
WB-57 Program Office
Attn: POC Name, POC phone #
Building 270, Ellington Field
Houston, Texas 77034

Shipping arrangements should be made with the WB-57 Program Office prior to shipment.

NOTE

Oversized shipments (i.e., those requiring a forklift, flatbed, or pickup truck to move) may be shipped directly to Hangar 990 or Building 994 with prior coordination. Delivery trucks must first stop at Guard Post 17 for inspection, and then NASA security must escort and provide gate access to the trucks at Hangar 990/Bldg 994. Contact the WB-57 Program Office to discuss this option.

9.2 Ground Support Equipment

Building 994 is equipped with a 2,000 pound capacity A-Frame hoist. Forklifts are available for the unloading and loading of payload equipment. Please contact the WB-57 Program Office for any special handling requirements.

9.3 Tool Control

The WB-57 Program Office provides an inventoried toolbox designated for researcher use (see Figure 29). The toolbox contains standard tools in both English and metric units. This toolbox is shadowed to enable ease of inventory. Prior to flight, this toolbox and all tools assigned to the WB-57 aircraft will be inventoried (a missing tool will ground the aircraft until found).

WB-798

Figure 29. Building 994 Toolbox

Before bringing your own tools to EFD, contact the WB-57 Program Office to confirm whether or not it will be necessary. Any researcher tools brought to EFD must be inventoried and accounted for prior to all WB-57 flights. Researcher tools and support equipment brought to EFD should be kept to a minimum and controlled in an organized fashion to mitigate any FOD hazards to the WB-57. All tools should be stored in a proper container such as a tool bag or box. Each container should have an inventory sheet listing all the tools contained. Tools needed for aircraft/payload integration will be briefed to the WB-57 Program Office upon arrival at EFD.

9.4 Access (Including Badging)

The WB-57 Program Office will provide arrangements for access to appropriate EFD facilities. Researchers will have 24/7 access to Bldg 994.

All individuals working at and visiting JSC AOD at EFD must display the appropriate access badge at all times. There are different badging requirements for U.S. citizens, permanent resident aliens, and other foreign nationals.

9.4.1 U.S. Citizens

All visiting personnel without a permanent NASA badge will be required to have the appropriate visitor badge during their stay at JSC (EFD). It is the responsibility of the user to provide badge request information (name, organization, and dates of visit) to the WB-57 Program Office two weeks prior to visit. U.S. citizens working for a company or corporation headquartered outside the United States shall follow the same procedures as foreign nationals (refer to Section 9.4.3). Individuals in this category are listed as "foreign representatives."

9.4.2 Permanent Resident Aliens ("Green Card" Holders)

Badging for Permanent Resident Non-U.S. citizens who have a Permanent Resident Alien Card ("Green Card") shall follow the same procedures as a U.S. citizen (see above). The only difference is that when a Permanent Resident Alien arrives at JSC and receives their badge, they must have their (original) Resident Alien Card ("Green Card") with them.

9.4.3 Foreign Nationals and Foreign Representatives

Access to JSC facilities by foreign nationals or representatives is strictly controlled. Since access requires many levels of approval, this process should begin three months prior to arrival. Contact the WB-57 Program Office with foreign national badge requests.

U.S. citizens working for a company or corporation headquartered outside the United States shall follow the same procedures as foreign nationals. Individuals in this category are listed as foreign representatives.

9.5 Safety

Safety of the aircraft, flight crew, and ground personnel is paramount during all aspects of payload design, integration, and operations.

Any work done by payload personnel on or around the aircraft shall be coordinated in advance with the WB-57 Program Office and/or maintenance. Researchers are generally not authorized access to the cockpit (pilot or SEO seat) due to safety hazard posed by the ejection seats. However, limited exceptions can be granted for researcher access to the rear cockpit. Completion of a safety briefing and a cockpit familiarization session is required. Contact the WB-57 Program Office for further information.

The flightline area can be busy and hazardous. Do not enter the flightline unless accompanied by a WB-57 program employee. Use caution on the flightline, and do not wander away from the WB-57 area, particularly towards the Coast Guard ramp (it is restricted). Always use proper hearing protection during aircraft operations. Earplugs are available inside Hangar 990 and Building 994.

Dress is casual, but consider safety when selecting clothes and shoes. Full foot protection is required when working around aircraft, hangars, and equipment. Shorts

are fine unless you are handling hazardous products/materials or performing tasks that would require additional protection.

Material shavings, splinters, dirt, and miscellaneous loose objects on payloads pose a very dangerous FOD hazard in flight. Loose objects will shift throughout the various phases of a flight, and could interfere with aircraft systems (flight controls, engine controls, etc.). For this reason, ensure all payload parts are clean and securely fastened during payload assembly. After assembly, vacuum and/or blow out all material shavings created during the assembly phase.

Equipment repairs (i.e., drilling, sanding, filing, or any other operation that may produce shavings or splinters) performed while integrating a payload to the aircraft must be approved by the WB-57 Program Office.

Refer to Appendix E for more detailed safety and emergency information.

APPENDIX A
PAYLOAD INFORMATION FORM

The current Payload Information Form (PIF) is available at the following link:

http://jsc-aircraft-ops.jsc.nasa.gov/wb57/firststeps.html

APPENDIX B
PAYLOAD DATA PACKAGE REQUIREMENTS

A PDP is required for each payload on the WB-57. The PDP will be submitted to the WB-57 Program Office no later than **six weeks** prior to flight to allow time for thorough review prior to the TRR. Late submissions may necessitate a one-day slip to the flight schedule for each day late. All payload documentation requirements are presented in this appendix, as well as the required format. It is imperative that all sections of the PDP be addressed. If a section is not applicable to your experiment, do not leave it out. Instead, address the non-applicable section with a brief statement explaining why it is not applicable to your experiment.

The PDP requirements presented in this Appendix are the absolute minimum required. These minimums should be exceeded if necessary to thoroughly explain a payload. Any changes to a payload design occurring after the PDP has been submitted must be approved by the WB-57 Program Office through submitted documentation of the change.

The required PDP format is listed below. Please be sure to define all acronyms at their first use.

A. Cover Page

The cover page of the PDP should contain the principal investigator's name, organization, and contact information (e-mail address, phone number, and mailing address), the payload name and acronym, the date the package was submitted, the revision letter if applicable, and required signatures.

Note on "version control:" The PDP, signed and approved by the customer, is the official payload documentation for the TRR. The original PDP does not have a revision letter. If payload modifications are made following the TRR, then ideally PDP Rev A would be the documentation for delta TRR #1, PDP Rev B would be the documentation for delta TRR #2, etc. If partial or incomplete PDPs are submitted for feedback or review, they should be dated and clearly marked "DRAFT" on all pages to avoid confusion. Multiple iterations of draft PDPs are acceptable, but changes from previous draft versions should be clearly noted. A final, signed "official" version will still be required no later than six weeks prior to flight.

Required Signatures: At a minimum, the final, complete PDP shall be signed and dated by the:

1. Author/Engineer (person who wrote the report)
2. Approver (Principal Investigator, Program Manager, or other person authorized to approve report release)

B. Quick Reference Data Sheet

The Quick Reference Data Sheet should be completed in the format shown below and be submitted on a dedicated page.

1. Principal Investigator
2. Contact Information

3. Payload Name and Acronym
4. Mission Profile / Number of Flights Requested
5. Requested Flight Date(s)
6. Payload Installation Location on Airplane (e.g., pallet, wing pod)
7. Payload Overall Assembly Weight (pounds)
8. Gas/Cryogenic Cylinder Requests (type and quantity)
9. Hazardous Materials to be used (include quantity)
10. Overboard Vent Requests (Yes or No) and Type of Gas to be Vented
11. Payload Power Requirement (Voltage and Current Required)
12. Ground Laboratory Work Space Requests (include storage requests)
13. Computer Network Access Requests
14. Sheet Metal Work Requests (only on NASA-owned hardware)
15. Electrical Wiring Requests
16. Miscellaneous Requests

Note for PDP Rev A, Rev B, etc: This page should highlight changes from the previous PDP version (e.g., original payload weight was 400 lbs and new payload weight is now 470 lbs). If the above information was in table format, there could be a column for "PDP Original" and "PDP Rev A" showing the differences. Red font highlighting the changes is also helpful. Also, include a short "Summary of Changes" paragraph below the data sheet that briefly describes the payload changes from the previous version and references the changed sections of the PDP. Change bars and/or red font highlighting the changes should also be used in the body of the PDP. The intent is to be able to quickly identify changes to the previously approved flight configuration from the last TRR.

C. Table of Contents

List the sections of the PDP and their corresponding page numbers.

D. Proposed Mission Profile and Flight Schedule

This section should address the type of flights being requested (where, how high, maneuvers, etc.), the number of flights being requested, and the proposed mission timeline with dates. This section should also address whether the experiment is a follow-up of a previous flight, a preliminary step to a future flight, etc. The name of any supporting organization/sponsor should also be listed here.

E. Payload Description

This section should briefly explain the payload design and objective, and should be written so that a practicing engineer can understand the experiment. Science (or engineering) goals should be presented along with a description of the expected results.

Include drawings and/or photographs of the payload, its overall weight and center of gravity (CG) location, and a proposed dimensional layout of the equipment in the aircraft. Any laser, fluid, chemical, RF transmission, and/or pressure/vacuum system should be described. Any component with special handling requirements or specific hazards must also be described in detail

F. Electrical

1. Electrical Loads

   This section shall list all the electrical loads (watts/amps). Include the standard operating conditions for which the load will be an active load, and identify the duration of operation for each load. Transient or warm-up requirements, and the ability of the circuit protection to handle such events, shall be documented.

2. Diagrams

   Block diagrams shall be sufficient to understand the required aircraft data/format and the basic power distribution for the incurred loads. Locations for the required components and any interconnections that may be required *outside* of the payload envelope shall be included. Wiring diagrams or schematics that depict the aircraft-payload interface shall be provided, and shall include wire sizes.

3. Antennas

   Describe any specialized antennas, required separations, frequency ranges, RF bonding requirements, and RF cable runs that are required.

G. Pressure/Vacuum Systems

Describe the purpose and design of any pressure/vacuum systems. All pressure/vacuum systems proposed for flight and/or ground use shall comply with JPR 1710.13. An OCCP will likely be required. Refer to Section 7.5.1 for more information.

H. Laser Systems

- For all lasers used in flight payloads and/or on the ground, provide the following information:
  - Laser class, type, and manufacturer.
  - Description of the laser's purpose, ground or flight.
  - Describe the containment controls (i.e., describe the protective housing, interlock switches, emergency kill switch, temperature/fire control, protective eyewear, etc.) that will be implemented in your laser system design.

All lasers proposed for flight and/or ground use shall comply with JPR 1700.1. There is a specific chapter for laser safety and health. All Class 3A and higher lasers must be registered and approved for use with JSC Form 44B. Refer to Section 7.7.1 for more information.

I. Hazard Analysis

A hazard analysis should be provided in the PDP to document the review and implemented control of hazards associated with a specific payload. Reference the Hazard Source Checklist below. If any of the hazards listed pertain to your experiment, describe the hazard and explain the control that exists to eliminate or mitigate the risk involved. If the payload presents a potential hazard for which no suitable hazard control is available, the deficiency must be documented and provided to the WB-57 Program Office. NASA will analyze this hazard and make a decision on risk acceptance.

1. HAZARD SOURCE CHECKLIST

Describe identified hazards and explain the control that exists to eliminate or mitigate the risk involved.

a. Flammable/combustible material, fluid (liquid, vapor, or gas)

b. Toxic/corrosive/hot/cold material, fluid (liquid, vapor, or gas)

c. High pressure system (static or dynamic)

d. Evacuated container (implosion)

e. Frangible material

f. Stress corrosion susceptible material

g. Inadequate structural design (e.g., low safety margin)

h. High intensity light source including laser (e.g., unintended reflections)

i. Ionizing/electromagnetic radiation

j. Rotating device

k. Extendible/deployable/articulating experiment element (collision)

l. Stowage restraint failure

m. Stored energy device (e.g., mechanical spring under compression)

n. Vacuum vent failure (e.g., loss of pressure/atmosphere)

o. Heat transfer (habitable area over-temperature)

p. Over-temperature explosive rupture (including electrical battery)

q. High/Low touch temperature

r. Hardware cooling/heating loss (e.g., loss of thermal control)

s. Pyrotechnic/explosive device

t. Propulsion system (pressurized gas or liquid/solid propellant)

u. High acoustic noise level

v. Toxic off-gassing material

w Mercury/mercury compound

x. Organic/microbiological (pathogenic) contamination source

y. Sharp corner/edge/protrusion/protuberance

z. Flammable/combustible material, fluid ignition source (e.g., short circuit under-sized wiring/fuse/circuit breaker)

aa. High voltage (electrical shock)

ab. High static electrical discharge producer

ac. Software error or computer fault

ad. Carcinogenic material

ae. Rapid depressurization of aircraft (e.g., optical window fracture)

af. Uninterrupted power supplies

ag. Transfer of liquid or gas in flight

ah. Liquid or gas leak (e.g., improper containment, electrical short circuit)

ai. Other

2. HAZARD ANALYSIS TABLE

Please use the table format below to provide an initial analysis of each of the hazards identified above. An example is shown. Definitions are provided below the table.

Hazard	**Severity**	**Probability**	**Risk Assessment Code (RAC)**
Failure of Pressurized Optical Window	III	C	4
B			
C			

Severity is an assessment of the worst potential consequence, defined by degree of injury or property damage, which could occur. The severity classifications/categories are defined as follows:

Class I – Catastrophic: A condition that may cause death or permanently disabling injury; facility destruction on the ground; or loss of crew, major systems, or aircraft during the mission.

Class II – Critical: A condition that may cause severe injury or occupational illness, or major property damage to facilities, systems, equipment, or flight hardware.

Class III – Moderate: A condition that may cause minor injury or occupational illness, or minor property damage to facilities, systems, equipment, or flight hardware.

Class IV – Negligible: A condition that could cause the need for minor first aid treatment though would not adversely affect personal safety or health. A condition that subjects facilities, equipment, or flight hardware to more than normal wear and tear.

Probability is the likelihood that an identified hazard will result in a mishap, based on an assessment of such factors as location, exposure in terms of cycles or hours of operation, and affected population. Probability estimates are defined as follows:

A – Likely to occur immediately (example, $X > 0.1$)

B – Probably will occur in time (example, $0.1 \geq X > 0.01$)

C – May occur in time (example, $0.01 > X > 0.001$)

D – Unlikely to occur (example, $0.001 > X > 0.000001$)

E – Improbable to occur (example, $0.000001 > X$)

Risk Assessment Codes provide a qualitative method for prioritizing risks and the importance of mitigating those risks. Combining the risk consequences with the probability the risk will occur yields an RAC that provides a basis for initial prioritization of risks and the need to take action to reduce the risk to an acceptable level.

RAC 1 – Risk is unacceptable and shall receive top priority for mitigation. Operations shall not commence or must cease immediately until the hazard is corrected or until temporary controls are in place and permanent controls are in work.

RAC 2 – Risk is next in priority after RAC 1 risks for mitigation. The AOD Chief is authorized to accept the risk with adequate justification.

RAC 3 – Risk is acceptable with controls. The AOD Chief or equivalent management is authorized to accept the risk with adequate justification.

RAC 4-7 – Risk is acceptable with controls.

Use the table below to assign a RAC based on hazard severity and probability.

Severity Classification	Probability Estimate				
	A	**B**	**C**	**D**	**E**
I – Catastrophic	1	1	2	3	4
II – Critical	1	2	3	4	5
III – Moderate	2	3	4	5	6
IV – Negligible	3	4	5	6	7

J. Hazardous Material

Hazardous material is defined as anything with a flashpoint below 140°F or with a threshold limit value (TLV) below 500 ppm, below 500 mg/m3 for fumes, below 10 mg/m3 for dust, or with a single oral dose (if liquid) at 50 percent lethality below 500 mg/kg. As a note, materials with flash points at or above 100°F are considered combustible and below are considered flammable. Please state whether or not you will be using any toxic, corrosive, explosive, flammable, combustible, and/or other hazardous materials. Describe what the material is, how it will be used, and quantities being used. If at all possible, avoid the use of hazardous materials. If such materials are required for a payload, proper containment must be provided. Please describe how you plan to safely contain and handle any hazardous materials. Early contact with the WB-57 Program Office for discussions on proper use and containment of proposed hazardous materials may prevent delays in getting approval for the use of such materials. If such materials are necessary, provisions for dumping and purging in flight and on the ground may be required. A current MSDS must be supplied for each hazardous material.

K. Ground Support Requirements

Describe what you will need in terms of ground support from the WB-57 Program Office. Please address the following:

- Type of ground power needed for testing/operating research equipment.
- The need for any pressurized gas or cryogenics. State how much is needed of each to assess storage space. Procurement of pressurized gases or cryogenics will be the responsibility of the researcher. MSDS must be provided.
- State whether or not you will be mixing or storing any chemicals that are toxic, corrosive, and/or explosive. If so, what type of material handling procedures will be required?
- Laboratory space requested (working and storage).
- Computer network access requested.
- Requests for special ground handling/support equipment (e.g., forklift, crane).
- Miscellaneous requests.

L. Mission Procedures

Researchers are responsible for all equipment sent to and from EFD. The WB-57 Program Office is not responsible for any shipping arrangements (refer to Section 6.4.1, Section 6.4.2, and Section 9.1.3 for additional information on the shipping and receiving of equipment to/from EFD). The information presented in this section of the PDP will describe all of the procedures involved with operating your experiment at EFD or at a remote deployment site. These procedures should be broken down in the following order:

1. Equipment Shipment

   State how equipment will be shipped (e.g., freight, include the shipping company name), when it will be shipped (i.e., month, day, and time), and what storage requirements are needed to safely store your hardware (e.g., space requirements, temperature).

2. Ground Operations

   State the procedures proposed to set-up and operate your equipment on the ground at EFD. All equipment will be inspected at the TRR (refer to Section 8.3) prior to flight.

3. Loading

   State the procedures proposed to load and integrate your equipment onto the WB-57.

4. Pre-Flight

   State the procedures proposed for pre-flight operations.

5. Flight Operations

   Flight checklists for payload operation will be generated through researcher consultation with the WB-57 SEO. Please state the backseat procedures that will most likely be requested to operate your payload during take-off, cruise, and/or landing operations.

6. Post-Flight

   State the procedures proposed for readying equipment for a subsequent flight.

7. Off-Loading

   State the procedures proposed for off-loading your payload from the WB-57. State the shipping arrangements that have been made for the removal of equipment from NASA property.

M. Appendix A – Stress Analysis

A complete stress analysis shall be done for each payload. The payload stress analysis report is designed to be a stand-alone document, but it should be included in this appendix to the PDP. Report requirements and format are governed by JSC AOD Engineering Document 8594001, Preparation of Stress Analysis Reports, located at the following link:

http://jsc-aircraft-ops.jsc.nasa.gov/wb57/guide.html

N. Appendix B – Material Safety Data Sheets

In this appendix to the PDP, include the MSDS that apply to any composite, plastic, foam, fabric, chemical, fluid, compressed gas, etc. that you are utilizing with your payload, either in flight or on the ground. The MSDS should correlate to descriptions provided in PDP Sections 9 and 10 so it is understood what the materials are used for. An MSDS must be provided for all chemicals taken onto NASA property. Copies of each MSDS must also be kept with the chemicals at their ground-based storage areas.

APPENDIX C
RACK/MOUNTING LOCATIONS

N/A to WB-57. Refer to Section 4.1.1 for payload integration locations.

APPENDIX D
DATA/NAVIGATION PARAMETERS

RS232 Navigation Data Recorder Output to Payload Areas

Data from all navigation data inputs is accumulated in a time buffer for one second. The data is processed and output to the RS232 data bus at 9600 baud. This results in a delay of one second between the actual time the data is received and the time it is output on the RS232 data bus. The time is correct to one millisecond. The data bus output format for N926 is as follows:

Parameter	Units	Output Format	Byte Size	Source
Header, GPS Status	'SOH' [G/N]	ASCII XX	2	Inserted
UTC Time (GMT)	Days:hrs:min:sec	ASCII XXX:XX:XX:XX	12	GPS
Present Pos. Latitude	Degrees	ASCII N/S XX.XXXXX	9	INU
Present Pos. Longitude	Degrees	ASCII E/W XXX.XXXXX	10	INU
True Heading	Degrees	ASCII XXX.XX	6	INU
Pitch Angle (up +)	Degrees	ASCII ±XX.XXXX	8	INU
Roll Angle (rt. +)	Degrees	ASCII ±XX.XXXX	8	INU
Ground Speed	Meters/Sec	ASCII XXX.XX	6	INU
Track Angle True	Degrees	ASCII XXX.XX	6	INU
Inertial Wind Speed	Meters/Sec	ASCII XX.X	4	INU
Inertial Wind Direction	Degrees	ASCII XXX.X	5	INU
Body Longitude Accl.	G	ASCII ±X.XXX	6	INU
Body Lateral Accl.	G	ASCII ±X.XXX	6	INU
Body Normal Accl.	G	ASCII ±X.XXX	6	INU
Track Angle Rate	Degrees/Sec	ASCII ±XX.X	5	INU
Pitch Rate	Degrees/Sec	ASCII ±XX.X	5	INU
Roll Rate	Degrees/Sec	ASCII ±XX.X	5	INU
Inertial Vertical Speed	Meters/Sec	ASCII ±XX.XX	6	INU
GPS Altitude	Meters	ASCII ±XXXXX.X	7	GPS
GPS Latitude	Degrees	ASCII N/SXX.XXXXX	9	GPS
GPS Longitude	Degrees	ASCII E/WXXX.XXXXX	10	GPS
Static Pressure*	Millibar	ASCII XXXX.XXX	8	Analog
Total Pressure	Millibar	ASCII XXXX.XXX	8	Analog
Differential Pressure	Millibar	ASCII XX.XXX	6	Analog
Total Temperature*	Degree C	ASCII ±XX.XX	6	Analog
Static Temperature*	Degree C	ASCII ±XX.XX	6	Derived
Barometric Altitude*	Meters	ASCII XXXXX.X	7	Derived
Mach No*	N/A	ASCII X.XXX	5	Derived
True Air Speed*	Meters/Sec	ASCII XXX.XX	6	Derived
Wind Speed*	Meters/Sec	ASCII XX.X	4	Derived
Wind Direction*	Degrees	ASCII XXX.X	5	Derived
Sun Elevation	Degrees	ASCII ±XX.XX	6	Derived
Sun Azimuth	Degrees	ASCII XXX.XX	6	Derived
Analog Channels (12)	Volts	ASCII ±X.XXX	6 (72 Total)	Analog
End of Frame	CR, LF	ASCII	2	Inserted

G: GPS Valid

NOTE: Each parameter is followed by a space. The values for each of the 12 analog channels are separated by spaces.

* These values are not valid below an aircraft altitude of 10 km.

The data bus output format for N928 is as follows (currently available at nose only):

Parameter	Units	Output Format	Byte Size	Source
Header, GPS Status	'SOH' [G/N]	ASCII XX	2	Inserted
UTC Time (GMT)	Days:hrs:min:sec	ASCII XXX:XX:XX:XX	12	GPS
Present Pos. Latitude	Degrees	ASCII N/S XX.XXXXX	9	INU
Present Pos. Longitude	Degrees	ASCII E/W XXX.XXXXX	10	INU
True Heading	Degrees	ASCII XXX.XX	6	INU
Pitch Angle (up +)	Degrees	ASCII ±XX.XXXX	8	INU
Roll Angle (rt. +)	Degrees	ASCII ±XX.XXXX	8	INU
Ground Speed	knots	ASCII XXX.XX	6	INU
Track Angle True	Degrees	ASCII XXX.XX	6	INU
Inertial Wind Speed	knots	ASCII XX.X	4	INU
Inertial Wind Direction	Degrees	ASCII XXX.X	5	INU
Body Longitude Accl.	G	ASCII ±X.XXX	6	INU
Body Lateral Accl.	G	ASCII ±X.XXX	6	INU
Body Normal Accl.	G	ASCII ±X.XXX	6	INU
Track Angle Rate	Degrees/Sec	ASCII ±XX.X	5	INU
Pitch Rate	Degrees/Sec	ASCII ±XX.X	5	INU
Roll Rate	Degrees/Sec	ASCII ±XX.X	5	INU
Inertial Vertical Speed	Meters/Sec	ASCII ±XX.XX	6	INU
Track Angle –Magnetic	Degrees	ASCII XXX.XX	6	INU
Magnetic heading	Degrees	ASCII XXX.XX	6	INU
Drift Angle	Degrees	ASCII XXX.XX	6	INU
Flight Path Angle	Degrees	ASCII XXX.XX	6	INU
Flight Path Accl.	G	ASCII ±X.XXX	6	INU
Inertial Pitch Rate	Degrees/Sec	ASCII ±XX.X	5	INU
Inertial Roll Rate	Degrees/Sec	ASCII ±XX.X	5	INU
Altitude (Inertial)	Feet	ASCII XXXXX.X	8	INU
Along Track Horiz. Accl.	G	ASCII ±X.XXX	6	INU
Cross Track Accl.	G	ASCII ±X.XXX	6	INU
Vertical Accl.	G	ASCII ±X.XXX	6	INU
N-S Velocity	Knots	ASCII XXX.X	6	INU
E-W Velocity	Knots	ASCII XXX.X	6	INU
Altitude	Feet	ASCII XXXXX	5	DADC
Baro Correct Altitude	Feet	ASCII XXXXX	5	DADC
Mach	Mach	ASCII X.XXX	4	DADC
Computed Airspeed	Knots	ASCII XXX.XX	6	DADC
Max Allow Airspeed	Knots	ASCII XXX.XX	6	DADC
True Airspeed	Knots	ASCII XXX.XX	6	DADC
Total Air Temperature	Deg C	ASCII ±XXX.XX	6	DADC
Altitude Rate	Ft/Min	ASCII XXXXX	5	DADC
Static Air Temperature	Deg C	ASCII ±XXX.XX	6	DADC

G: GPS Valid

NOTE: Each parameter is followed by a space. The values for each of the 12 analog channels are separated by spaces.

* These values are not valid below an aircraft altitude of 10 km.

RS232 Time Channel Data Format

Data from the Global Positioning System (GPS) time and date labels are read, translated and formatted. This data is sent on the RS232 Time Channel at 9600 baud. The date is Julian and the time is Universal Coordinated Time (UCT). The string is terminated by a carriage return and line feed. The effective time begins at the first character of this frame with less than 0.1 milliseconds of delay. The output format (in ASCII) is as follows:

DATE_ _XXX_ _TIME_ _XX:XX:XXCRLF [27 characters total]

CR = Carriage Return
LF = Line Feed

ARINC 429 GPS Output To Payload Areas

The Navigation Data Recorder provides GPS data to all payload areas in ARINC 429 format. The GPS ARINC 429 output format is as follows:

BINARY LABEL	PARAMETER	OUTPUT RATE (Hz)	NUMERIC RANGE	UNITS	SIG BITS *	RESOLUTION	POSITIVE SENSE
072	Inertial Latitude	8	± 90	Degrees	20	0.000172	North from Zero
073	Inertial Longitude	8	± 180	Degrees	20	0.000172	East from Zero
076	GPS Altitude	1	± 131,072	Feet	20	0.125	Up
101	GPS HDOP	1	0-1024	Meters	15	0.031	Always Positive
102	GPS VDOP	1	0-1024	Meters	15	0.031	Always Positive
103	GPS Track Angle	1	± 180	Degrees	15	0.0055	CW from North
110	GPS Latitude	1	± 90	Degrees	20	0.000172	North from Zero
111	GPS Longitude	1	± 180	Degrees	20	0.000172	East from Zero
112	GPS Ground Speed	1	0-4096	Knots	15	0.125	Always Positive
114	Desired Track **	2	± 180	Degrees	15	0.005493	CW from North
116	Cross Track	4	± 128	Naut. Mi.	15	0.004	Right
120	GPS Latitude-Fine	1	0-0.000172	Degrees	11	8.38E-8	North from Zero
121	GPS Longitude-Fine	1	0-0.000172	Degrees	11	8.38E-8	East from Zero
130	GPS Integrity Limit	1	0-16	Naut. Mi.	18	6.1E-5	N/A
136	GPS Vert FOM Or EVE	1	0-32,768	Feet	18	0.125	Always Positive
150	UTC (BCD Format)	1	23:59:59	Hr:Min:Sec	17	1.0	Always Positive
165	GPS Vert Vel.	1	± 32,768	Ft/Min	15	1.00	Up
166	GPS N-S Velocity	1	± 4,096	Knots	15	0.125	North
174	GPS E-W Velocity	1	± 4,096	Knots	15	0.125	East
247	GPS Horiz FOM	1	0-16	Naut. Mi.	18	6.1E-5	Always Positive
60	Date	1	N/A	BCD	6	1 Day	N/A
273	GPS Sensor Status	1	N/A	DIS	19	N/A	N/A

* Does not include sign bit

** Outputs magnetic information when magnetic mode is selected. True mode is selected for Arctic/Antarctic Navigation (Latitudes above 73° N or below 60° S)

ARINC 429 INS Output to Payload Areas

In addition to GPS data, the Navigation Data Recorder provides Inertial Navigation System (INS) data to all payload areas. The following INS parameters are output to all payload areas in the ARINC 429 output format:

BINARY LABEL	PARAMETER	OUTPUT RATE (Hz)	NUMERIC RANGE	UNITS	SIG BITS *	Least Significant Bit (LSB)	POSITIVE SENSE
310	Present Position Lat (UPD)	8	± 90	Degrees	20	0.000172	North from Zero
311	Present Position Lon (UPD)	8	± 180	Degrees	20	0.000172	East from Zero
312	Ground Speed	32	0 – 4096	Knots	18	0.01563	Always Positive
313	Track Angle True	32	± 180	Degrees	18	0.000687	CW from North
314	True Heading	32	± 180	Degrees	18	0.000687	CW from North
315	Wind Speed	16	0 – 256	Knots	18	0.000977	Always Positive
316	Wind Direction True	16	± 180	Degrees	18	0.000687	CW from North
317	Track Angle (Magnetic)**	32	± 180	Degrees	18	0.000687	CW from North
320	Heading (Magnetic)**	32	± 180	Degrees	18	0.000687	CW from North
321	Drift Angle	32	± 90	Degrees	18	0.000687	Right
322	FLT Path Angle	32	± 90	Degrees	18	0.000687	Up
323	FLT Path Accel	64	± 4	G	18	0.0000153	Forward
324	Pitch Angle	64	± 180	Degrees	18	0.000687	Up
325	Roll Angle	64	± 180	Degrees	18	0.000687	Right Wing Down
326	Body Pitch Rate	64	± 128	Deg/Sec	18	0.000488	Up
327	Body Roll Rate	64	± 128	Deg/Sec	18	0.000488	Right Wing Down
330	Body Yaw Rate	64	± 128	Deg/Sec	18	0.000488	Nose Right
331	Body Longitude Accel	64	± 4	G	18	0.0000153	Forward
332	Body Lateral Rate	64	± 4	G	18	0.0000153	Right
333	Body Normal Rate	64	± 4	G	18	0.0000153	Up
334	Platform Heading	32	± 180	Degrees	18	0.000687	CW from Zero
335	Track Angle Rate	64	± 32	Deg/Sec	18	0.000122	CW
336	Pitch ATT Rate	64	± 128	Deg/Sec	18	0.000488	Up
337	Roll ATT Rate	64	± 128	Deg/Sec	18	0.000488	Right Wing Down
360	Potential Vert Speed	64	± 32,768	Ft/Min.	18	1.00	Up
361	Inertial Altitude	32	± 131,072	Feet	20	0.125	Up
362	Along TRK Horiz Accel	64	± 4	G	18	0.0000153	Forward
363	Cross TRK Horiz Accel	64	± 4	G	18	0.0000153	Right
364	Vertical Accel	64	± 4	G	18	0.0000153	Up
365	Inertial Vert Speed	32	±32,768	Ft/Min	18	0.125	Up
366	N-S Velocity	16	± 4096	Knots	18	0.0000153	North
367	E-W Velocity	16	± 4096	Knots	18	0.0000153	East

* Does not include sign bit

** Information not valid when Latitude is greater than 73° North or 60° South (Arctic/Antarctic Navigation)
UPD = UPDated information form GPS

APPENDIX E
DETAILED SAFETY AND EMERGENCY PROCEDURES

The JSC WB-57 High Altitude Research Program is operated in accordance with established NASA safety procedures. JSC participates in the Occupation Safety and Health Administration (OSHA) Voluntary Protection Program (VPP), which is a cooperative effort between OSHA, management, and employees to achieve a safer, healthier work environment. JSC's safety goal is to become a nationally recognized center of excellence for safety and health.

Due to the critical nature of the WB-57 program, a multi-stage review and approval procedure has been developed to ensure personnel and flight safety. This section describes the general safety practices and guidelines that all personnel and equipment must comply with in order to occupy and operate on NASA property. Please contact the WB-57 Program Office with any questions regarding safety practices at EFD.

A. Johnson Space Center Requirements

All personnel and equipment at JSC EFD must adhere to the safety guidelines as defined in JPR 1700.1. The complete current document is available at: http://jschandbook.jsc.nasa.gov/

Any hazards or injuries shall be reported immediately.

B. Aircraft Operations Division Requirements

A safety briefing will be given to all program participants upon arrival at EFD. Attendance at this briefing is mandatory for all program participants. Specific areas addressed at this briefing include:

C. Emergency Procedures

Dial ext. 44444 (five 4's) from any NASA telephone to report an emergency at EFD. From a cell phone, dial **281-244-4444**. This is the direct line to the Ellington Fire Department, our primary responders for all incidents. Do not dial 911 as this may actually slow the response time.

If possible, **dial ext. 33333** (five 3's) as a secondary number to report an emergency at EFD. From a cell phone, dial **281-483-3333**. This is the direct line to JSC Emergency Dispatch and will notify secondary responders from JSC which includes spill teams, environmental, security, as needed. Be sure to tell them you are at EFD.

If you hear a fire alarm or an air horn (indicating a gas leak), proceed immediately to the nearest designated evacuation assembly point. If you smell gas, sound the nearest air horn. Do not use the telephone or fire alarm to report a gas leak due to explosion hazard.

D. Laboratory/Facility Safety

Only **authorized personnel** are permitted in the various facilities. Permanent NASA badges or visitor badges issued by JSC Security must be displayed at all times while on NASA/JSC property.

No **driving or parking** inside the main fence. Parking is available in the main lot across from the north end of Hangar 990.

Smoking is discouraged, but allowed in designated outdoor areas. There is no smoking inside buildings, government vehicles, or on the flightline. Smoking is not permitted within 50 feet of aircraft, jet fuel, or other hazardous areas such as liquid oxygen or HAZMAT storage. Smoking is not permitted within 25 feet of doorways, entries, operable windows, and outdoor air intake ducts.

All **trash/recyclables** must be placed in provided receptacles. Use specifically labeled trash receptacles for batteries, oil rags, chemicals, etc.

Hazardous materials/chemicals must be properly identified. All requisite precautions consistent with the safe handling of hazardous materials and chemicals must be followed at all times, to include use of PPE such as safety glasses, gloves, aprons, etc. All high pressure cylinders must be in racks and properly secured. An MSDS is required for all hazardous materials/chemicals.

Tool Control: All equipment (tools, test hardware, fluids, etc.) brought to EFD must be inventoried and accounted for at all times. A tool lost in the aircraft can jam critical control cables or otherwise affect safety of flight. Therefore, the aircraft will be grounded until any missing tools can be found.

Equipment: Operation of research or other equipment must be attended at all times.

E. Hangar Safety

Aircraft hangars are large industrial work areas. Hazards are always present and may include:

- Aircraft and equipment being towed
- Aircraft on jacks
- Hoses, cables, grounding wires, and other trip hazards
- Fuel, hydraulic fluid, water, and lubricant spills on the hangar floor (slip hazard)
- Sharp surfaces on aircraft (flaps/trailing edge of wings/gear doors)

Be cautious and stay in the walkway on the side of the hangar whenever possible. Do not walk through moving hangar doors.

When using electrical cords/power strips, all electrical connections shall be a minimum of 18 inches off the ground to prevent ignition of any fuel vapor. There are cones located in Hangar 990 for this purpose.

Electric drills and other electric tools shall not be used. Only battery-powered or pneumatic tools are permitted. Sparks from brushed motors or other electric tools may set off the fire suppression system or potentially ignite fuel vapor.

Do not operate the hangar doors or any other controls inside the hangar.

Dress for an industrial workplace. No high heels or open-toed shoes, or loose clothing that may be caught in machinery, etc.

F. Aircraft Safety

Access to the aircraft is controlled. An AOD employee or contractor must accompany anyone requiring access to the aircraft. Special qualifications are required for access to the cockpit (front or rear seat) due to safety hazard posed by ejection seats.

Stay clear of the aircraft during refueling, liquid oxygen servicing, maintenance, towing, or taxiing.

FOD: FOD is a major concern for any aviation activity. Loose items left in and around the aircraft can cause extensive damage to aircraft engines or other systems. Be sure to secure all pens, pencils, jewelry, badges, hats, sunglasses, cell phones, trash, tools, small hardware, etc. Do not take non-essential items to the aircraft or flightline. If you find FOD on the ramp, please pick it up and dispose of it properly.

G. Flight Line Safety

The flight line is a controlled access area. An AOD employee or contractor must accompany anyone requiring access to the flight line. Please stay with your group and do not wander away from the immediate vicinity of Hangar 990.

Hearing protection is required during all flight operations. Earplugs are readily available at various locations at EFD.

Jet exhaust can be hazardous up to 200 feet behind aircraft. Jet intake can be hazardous within 35 feet.

Unless you are a ground crew member, do not operate any ground support, material handling, or aircraft equipment or systems.

Be cautious of moving aircraft and vehicles on the flightline. Aircraft, official vehicles, and Ground Support Equipment (GSE) always have right of way. Look before crossing the flightline road that runs in front of Buildings 993/994.

No driving on the flightline.

Be sure to protect yourself against the weather and other hazards while on the flightline (e.g., full foot protection, hat, sunscreen, chapstick, no high heels), and drink plenty of water during the hot summer months.

Lightning Detection System: Seven one-second horn blasts accompanied by an amber beacon and/or a lightning announcement indicate lightning in the vicinity. Proceed indoors immediately and remain under cover until the "all clear" is given. "All Clear" will be indicated by one continuous seven-second horn blast, amber beacon off, and/or "all clear" announcement made.

H. WB-57 Program Office Requirements

1. Payload Data Package

A PDP is required for all payloads on the WB-57. This package must provide detailed documentation of the payload and address all aspects of its design and operation. It is due no later than **six weeks** prior to flight to allow sufficient time for review. Late submissions may necessitate a one-day slip to the flight schedule for each day late. Refer to Appendix B.

2. Test Readiness Review

The TRR is the final safety review of a payload prior to its flight. It includes a complete payload review of supporting analyses and documentation, an inspection of the payload hardware, and a final integrated verification of flight readiness. The PDP is the primary source of payload documentation. A TRR is required for **all** new and modified payloads. During the TRR, each experiment will be "approved," "approved pending corrections indicated," or "not approved" for flight. Researchers may be required to operate their equipment during the TRR. A unanimous decision from the reviewers is required for flight approval. Refer to Section 8.3.

The customer will complete a TRR questions checklist prior to each TRR. The checklist addresses specific payload design and safety of flight issues and can be found at http://jsc-aircraft-ops.jsc.nasa.gov/WB57/datapackage.html/.

3. Safety of Flight

The flight crew for the WB-57 is made up of a pilot (front seat) and a SEO (back seat). The pilot is responsible for flying the aircraft (including navigation, radio, and system diagnostic responsibilities) during all phases of a flight. The pilot is ultimately responsible for the safety of the crew and aircraft and has the final say as to whether or not the flight will proceed.

The SEO is responsible for the safe operation of all payloads on the WB-57 as well as some navigational and pilot assistance responsibilities. The SEO, in coordination with the pilot, has the authority to shut down all payloads for safety of flight issues. Payload operation checklists will be generated and certified for flight through regularly scheduled briefings attended by the researcher, pilot, and SEO. Deviations from the payload operation checklist are allowed to address issues pertaining to the overall safety of the flight.

INDEX

Aircraft Safety, 84
ARINC 429 GPS Output to Payload Areas, 80
ARINC 429 INS Output to Payload, 81
ARINC 429 INS Output to Payload Areas, 81
Auxiliary Power Panels, 33
Building, 57, 61, 65
Deployment, 41
Deployments, 42, 43, 58
EFD, 25, 27, 42, 43, 44, 57, 58, 61, 64, 65, 83, 84
Electrical, 24, 25, 28, 29, 41, 43, 44, 49, 69, 70, 83
Ellington Field, 45
Equipment, 10, 11, 12, 13, 21, 22, 28, 47, 52, 58, 63, 66, 75, 83, 84
Equipment and Material Storage, 63
Experiment Interface Panel, 29
Flight Line Safety, 84
Flight Operations, 42, 75
Foreign Nationals, 65
Ground Operations, 75
Hangar, 37, 45, 57, 61, 63, 65, 83, 84
Hazard Source Checklist, 71
High Flight, 56
Johnson Space Center Requirements, 82
Laboratory/Facility Safety, 82
Laser, 44, 70
Loading, 17, 18, 19, 75
Low Flight, 56
Navigation Data Recorder Output, 78
Nose, 16, 17, 27, 81
Overboard Vent, 69
Pallet, 15, 16, 24, 25
Payload Description, 70
Payload Design Specifications, 45
Payload Integration Locations, 23
Permanent Resident Aliens, 65
Pinout Receptacles, 31, 32, 33
Post-Flight, 57, 75
Pre-Flight, 75
Proposed Mission Profile And Flight Schedule, 69
Quick Reference Data Sheet, 68
RS232 Time Channel Data Format, 80
Safety of Flight, 85
Security, 82
Shipping and Receiving, 63
Test Readiness Review, 12, 41, 43, 85
Tool Control, 58, 64, 83
Toolbox, 64
U.S. Citizens, 65
WB-57, 9, 12, 14, 15, 16, 17, 20, 21, 22, 23, 24, 25, 26, 27, 28, 36, 37, 38, 39, 40, 41, 42, 43, 44, 45, 46, 47, 48, 49, 50, 51, 52, 53, 54, 55, 56, 57, 58, 61, 62, 63, 64, 65, 66, 68, 71, 74, 75, 77, 82, 85
WB-57 Program Office, 9, 16, 17, 24, 25, 27, 28, 36, 37, 39, 40, 41, 42, 43, 45, 46, 48, 49, 50, 51, 52, 53, 54, 57, 58, 61, 63, 64, 65, 66, 68, 71, 74, 75, 82, 85