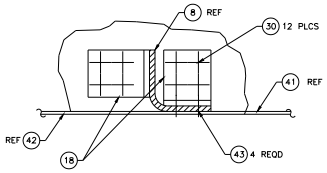

SECTION E-E
SCALE: 1/1
APPLICABLE 2 PLCS

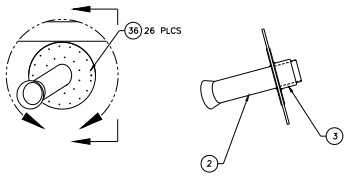

DETAIL G
SCALE: 1/1
-301 ASSEMBLY ONLY

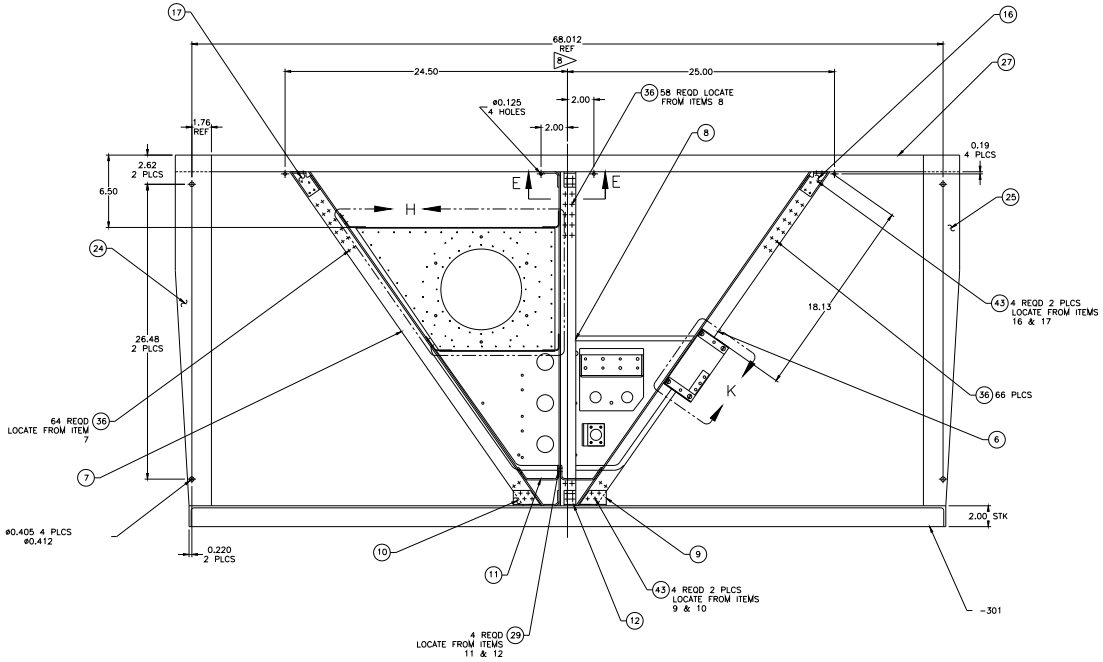

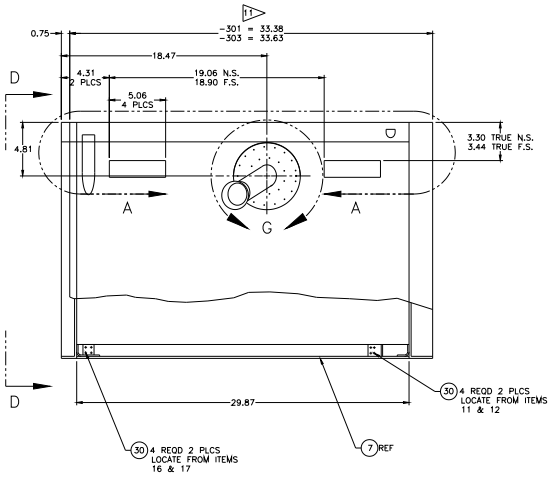

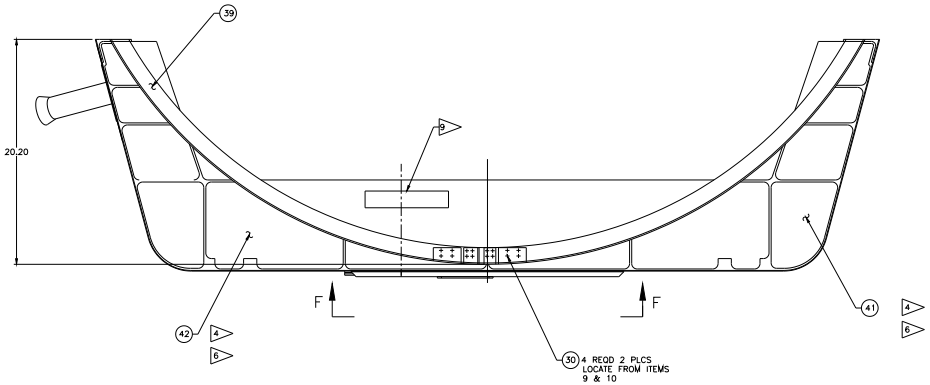

ITEM	PART NUMBER	DESCRIPTION	MATERIAL	SPECIFICATION

DIMENSIONAL TOLERANCE UNLESS NOTED OTHERWISE
.0 ±.10
.00 ±.02
.000 ±.005
ANGULAR ±.5 DEG

SURFACE FINISH IN MICRONICHES RMS UNLESS NOTED OTHERWISE

NEXT ASSEMBLY

SIGNATURES		DATE
DR:	J.MARABELLA	1/26/00
ENG:		
CH:		
APP:		
AUTH:		

EFFECTIVITY: WB-57F

NATIONAL AERONAUTICS & SPACE ADMINISTRATION
LYNDON B. JOHNSON SPACE CENTER HOUSTON, TEXAS

AFT TRANSITION
WB-57F

CODE IDENT NO.	SIZE	DWG. NO.	REV
21356	E	5711335	

SCALE: 1/4 ACFT ENGRG SECT CC SHEET: 2 OF 4

ACD FORM 46-E (OCT 97)

LTR	ZONE	REVISION	DATE	APPROVAL

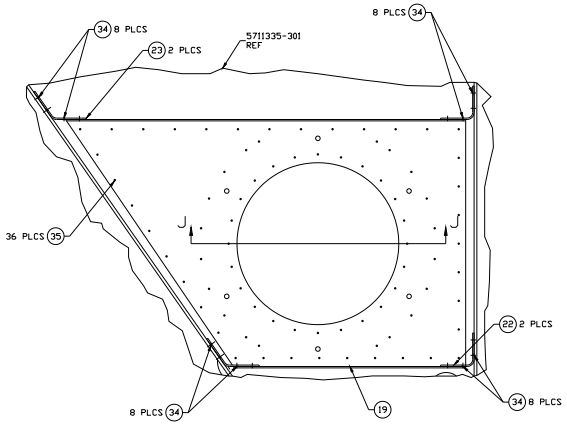

DETAIL H
SCALE: 1/2

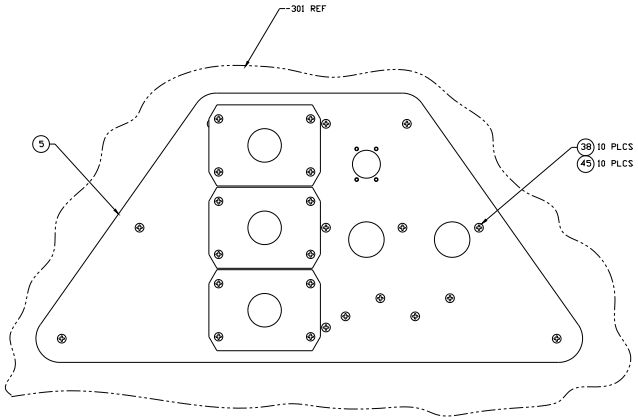

VIEW F-F
SCALE: 1/2

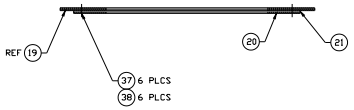

SECTION J-J
SCALE: 1/2

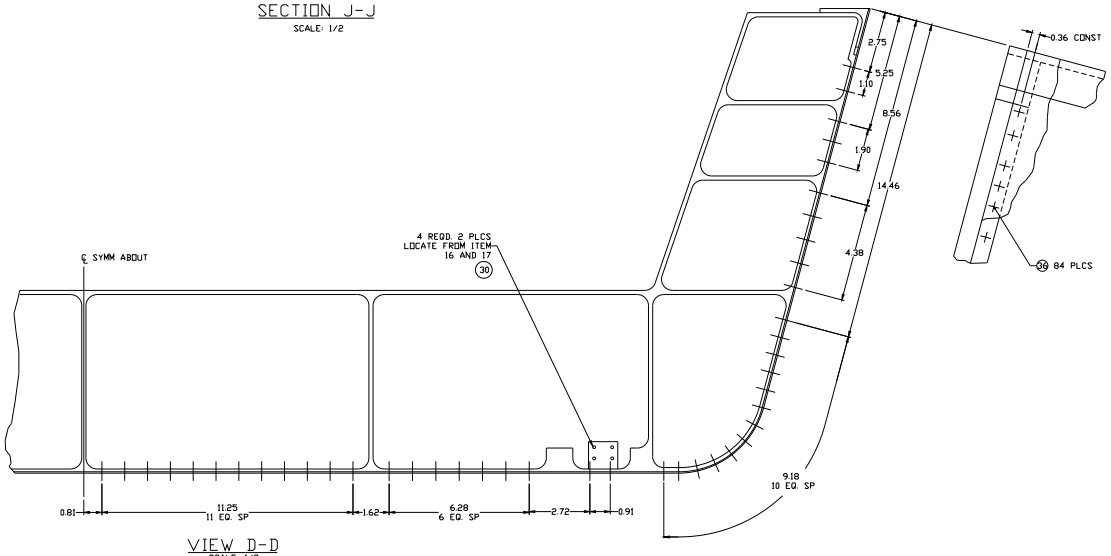

VIEW D-D
SCALE: 1/2

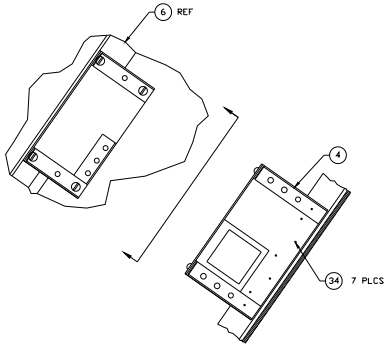

DETAIL K
SCALE: 1/2

ITEM	PART NUMBER	DESCRIPTION	MATERIAL	SPECIFICATION

DIMENSIONAL TOLERANCE UNLESS NOTED OTHERWISE
.2 ±.10
.00 ±.05
.000 ±.005
ANGULAR ± .5 DEG

SURFACE FINISH IN MICRONCHES RMS UNLESS NOTED OTHERWISE

NEXT ASSEMBLY

SIGNATURES	DATE
DR: J.MARABELLA	1/26/00
ENG:	
CH:	
APP:	
AUTH:	

EFFECTIVITY: WB-57F

NATIONAL AERONAUTICS & SPACE ADMINISTRATION
LYNDON B. JOHNSON SPACE CENTER HOUSTON, TEXAS

AFT TRANSITION WB-57F

CODE IDENT NO.	SIZE	DWG. NO.	REV
21356	E	5711335	

SCALE: 1/4 ACFT ENGRG SECT CC SHEET: 4 OF 4

ADD FORM 46-E (OCT 87)