LTR	ZONE	REVISION	DATE	APPROVAL

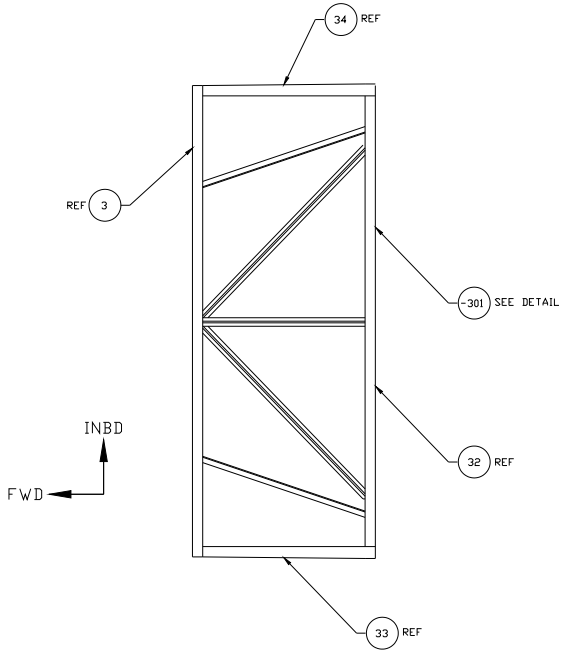

ORIENTATION VIEW LOOKING DOWN

SCALE: NONE

-702	-701	-302	-301	ITEM	PART NUMBER	DESCRIPTION	MATERIAL	SPECIFICATION		ZONE
				36	53	99967-C.098	FASTENER		12	
		16			52	MS20426AD2-5	RIVET			
			38	51	MS20470AD4-7	RIVET				
12			8	50	MS21042-3	NUT				
			4	49	MS20426AD4-9	RIVET, FLAT HD				
		8	32	48	MS20426AD4-8	RIVET, FLAT HD				
		162	4	47	MS20426AD4-7	RIVET, FLAT HD				
		156	562	46	MS20426AD4-6	RIVET, FLAT HD				
AR				45	140-RTV	ADHESIVE			16	
AR				44	1200	PRIMER			16	
		24		43	FJB-35	STUD			14	
		24		42	3	SNAP RING			14	
		24		41	S3200	SPRING			14	
		4		40	MS20470AD4-8	RIVET				
			190	39	MS20426AD4-5	RIVET, FLAT HD				
		48	72	38	MS20426AD3-5	RIVET, FLAT HD				
			8	37	AN960PD10	WASHER				
			8	36	AN3-5A	BOLT				
				35	5711343-301	HAND GRIP ASSY				C1 2
		1		34	5711348-302	LONGERON				E4 2
		1		33	5711348-301	LONGERON				E4 2
		1		32	5711347-301	FRAME				H8 2
		1		31	5711238-302	SPLICE SEAL				D1 2
		1		30	5711238-301	SPLICE SEAL				D1 2
		2		29	5711352-701	TUBE ASSEMBLY				D1 2
	2			28	5711345-007	DOUBLER	6061-T6 AL ALY .125 X 14.5 X 17.1 SH	QQ-A-250 /11	4	D3 4
		1		27	5711346-007	BEAM				G2 2
		1		26	5711346-006	STIFFNER				C6 2
		1		25	5711346-005	STIFFNER				C6 2
		1		24	5711346-004	STIFFNER				E6 2
		1		23	5711346-003	STIFFNER				E6 2
		1		22	5711346-001	STIFFNER				H7 2
		1		21	5711351-004	DOUBLER				F4 2
		1		20	5711351-003	DOUBLER				F4 2
		1		19	5711351-002	PLUG				F4 2
		1		18	5711351-001	PLUG				F4 2
		1		17	5711345-003	SKIN	6061-T6 AL ALY .063 X 25.4 X 41.7 SH	QQ-A-250 /11	4	B4 2
		1		16	5711345-001	SKIN	6061-T6 AL ALY .063 X 25.4 X 41.7 SH	QQ-A-250 /11	4	B4 2
		2		15	5711352-015	GUSSET				F4 3
	4			14	5711352-013	CLIP				F3 4
		2		13	5711352-011	CLIP				D1 3
		1		12	5711352-010	CLIP				H7 4
		1		11	5711352-009	CLIP				H7 4
		2		10	5711352-007	CLIP				B2 3
		1		9	5711352-006	CLIP				E4 3
		1		8	5711352-005	CLIP				E4 3
		1		7	5711352-003	CLIP				H6 3
		1		6	5711352-002	CLIP				B7 3
		1		5	5711352-001	CLIP				B7 3
		1		4	5711345-005	STRAP	2024-T3 AL ALY .063 X 0.8 X 83.5 SH	QQ-A-250 /5	4	C4 2
		1		3	5711350-001	FRAME				C6 2
-	1			2	5711349-701	DOOR ASSY				G2 4
-		2		1	5711352-701	TUBE ASSY				D3 2
	-				-302	FWD TRANSITION			NONE	B2 4
	1	-			-301	FWD TRANSITION			NONE	F6 1
									FINISH	

13 WELD PER MIL-W-22248, CLASS 4 ACCEPTANCE CRITERIA.

12 CINCH MONADNOCK CITY OF INDUSTRY, CA OR EQUAL.

11 CUT COPE AND/OR BLOCK TO FIT AT ASSY.

10 CUTOUT 5711345-001 SKIN USING 5711352-701 AS TEMPLATE.

9 CUTOUT 5711345-001 SKIN USING 5711238-301 AS TEMPLATE.

8 PERMANENT INK MARK PART NUMBER USING .12 HIGH CHARACTERS PER MSC-SPEC-M-1, LOCATE APPROXIMATELY AS SHOWN.

7. ORIGINAL JSC DRAWING SEZ39110069 RE-CREATED ON CAD.

6 HOLES TO BE LOCATED FROM 5711335-001 AND -002.

5 ALCLAD SURFACE TO BE EXTERIOR.

4 APPLY CHEMICAL FIL PER MIL-C-5541, CLASS 1A, INSIDE SURFACE ONLY.

3. -301 TO BE USED ON NASA 926 AIRCRAFT,
-302 TO BE USED ON NASA 928 AIRCRAFT.

2. INSTALL FASTENERS PER MIL-STD-403.

1. FABRICATION TOLERANCES AND PRACTICES PER SKZ36103755.

NOTES UNLESS OTHERWISE SPECIFIED.

17 USE ITEM 2 DOOR AS TEMPLATE AND CUT OUT SKIN LEAVING .06 GAP ALL AROUND.

16 DOW CORNING CORP MIDLAND, MI OR EQUAL.

15 INSTALL PER MANUFACTURERS INSTRUCTIONS.

14 DZUS FASTENER CO INC. WEST ISLIP, NY OR EQUAL.

DIMENSIONAL TOLERANCE UNLESS NOTED OTHERWISE
.X ± .10
.XX ± .02
.XXX ± .005
ANGULAR ± .5 DEG

SURFACE FINISH 16 MICROINCHES RMS UNLESS NOTED OTHERWISE

NEXT ASSEMBLY

SIGNATURES	DATE
DR: J.MARABELLA	1/3/01
ENG:	
CH:	
APR:	
AUTH:	

EFFECTIVITY: WB-57F

NATIONAL AERONAUTICS & SPACE ADMINISTRATION
LYNDON B. JOHNSON SPACE CENTER HOUSTON, TEXAS

FWD TRANSITION ASSEMLY WB-57F

CODE IDENT NO.	SIZE	DWG. NO.	REV
21356	E	5711345	

SCALE: 1/4 ACFT ENGRG SECT CC SHEET: 1 OF 4

ACD FORM 46-E (OCT 97)

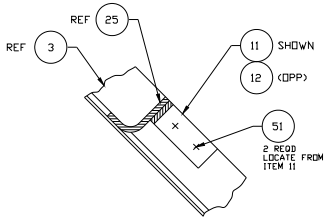

SECT M-M E5/2

SCALE : 1/1

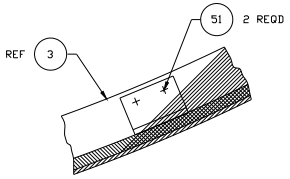

SECT J-J E4/3

APPLICABLE 2 PL
SCALE: 1/1

FWD

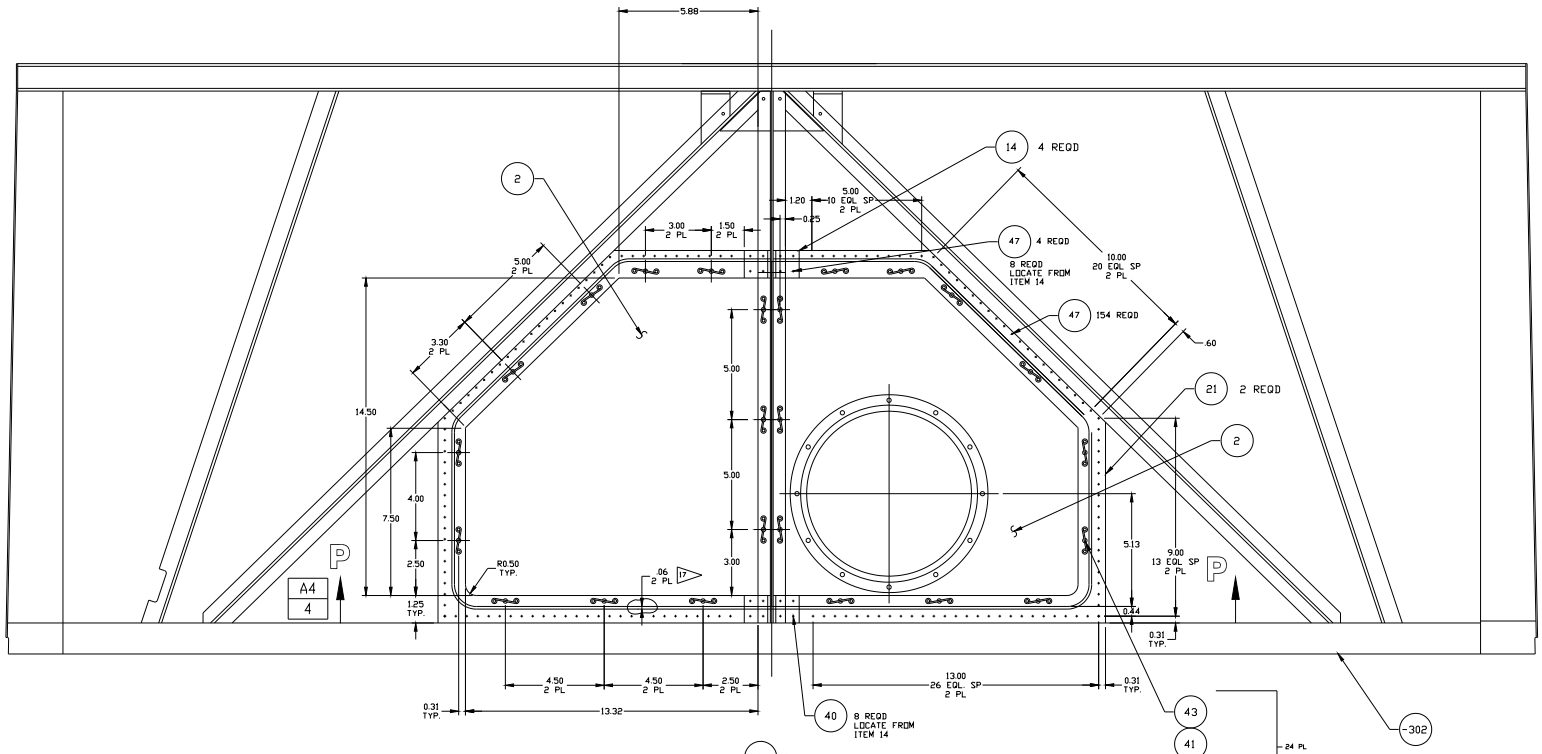

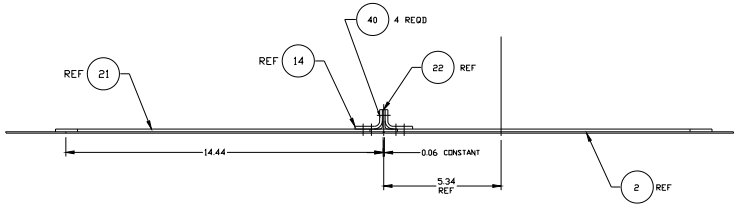

SECTION P-P C6/4

ITEM	PART NUMBER	DESCRIPTION	MATERIAL	SPECIFICATION	ZONE

DIMENSIONAL TOLERANCE UNLESS NOTED OTHERWISE
.X ±.10
.XX ±.02
.XXX ±.005
ANGULAR ± .5 DEG

SURFACE FINISH IN MICRONCHES RMS UNLESS NOTED OTHERWISE

NEXT ASSEMBLY

SIGNATURES	DATE
DR: J.MARABELLA	1/3/01
ENG:	
CHK:	
APP:	
AUTH:	

EFFECTIVITY: WB-57F

NATIONAL AERONAUTICS & SPACE ADMINISTRATION
LYNDON B. JOHNSON SPACE CENTER HOUSTON, TEXAS

FWD TRANSITION ASSEMLY
WB-57F

CODE IDENT NO.	SIZE	DWG. NO.	REV
21356	E	5711345	

SCALE: 1/2 ACFT ENGRG SECT CC SHEET: 4 OF 4

ADD FORM 46-E (OCT 97)