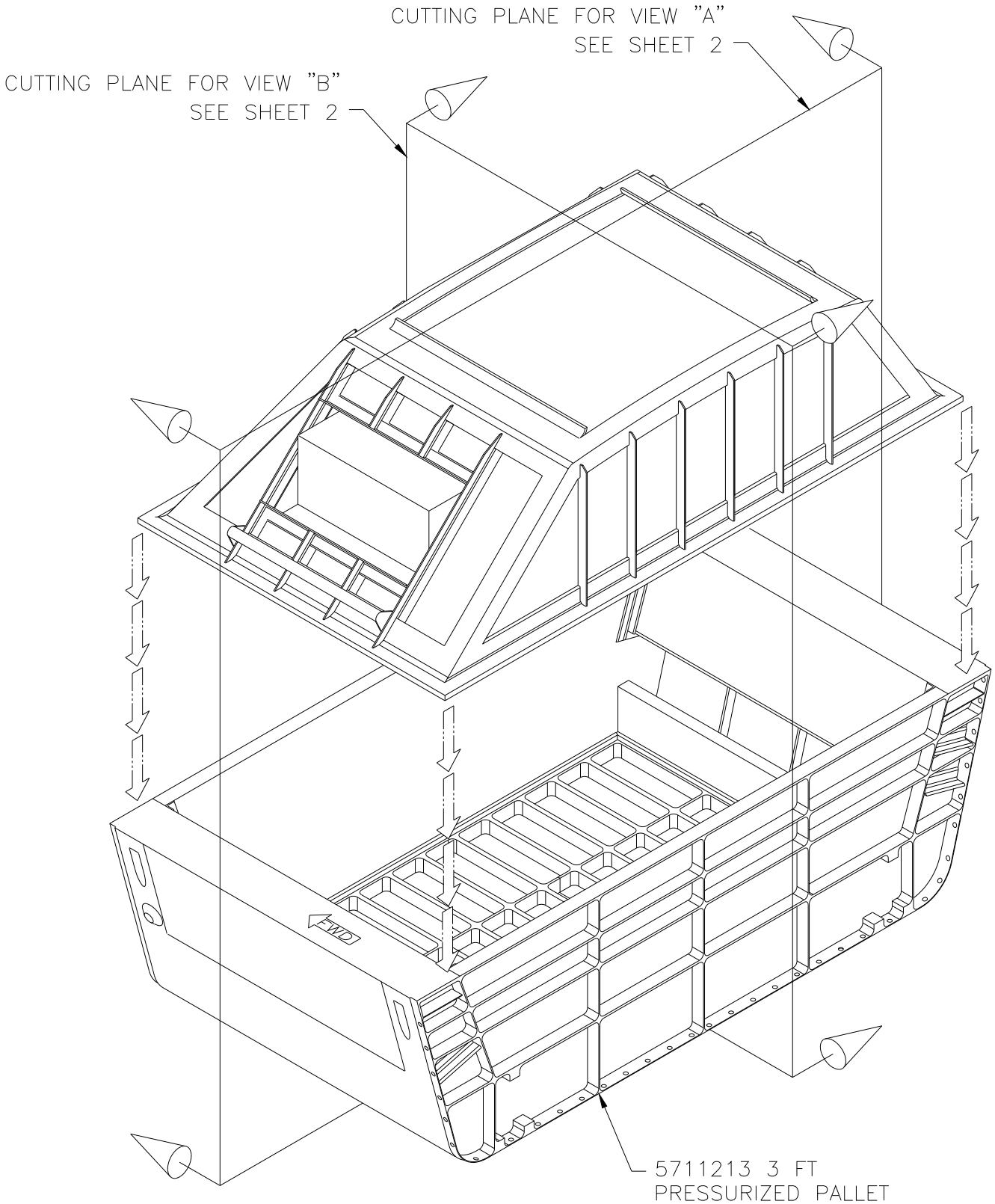

GENERAL ARRANGEMENT

ISO VIEW – NO SCALE

GENERAL ARRANGEMENT, 3 FT PRESSURIZED PALLET
DWG No. 5711212, SHEET 1 OF 3

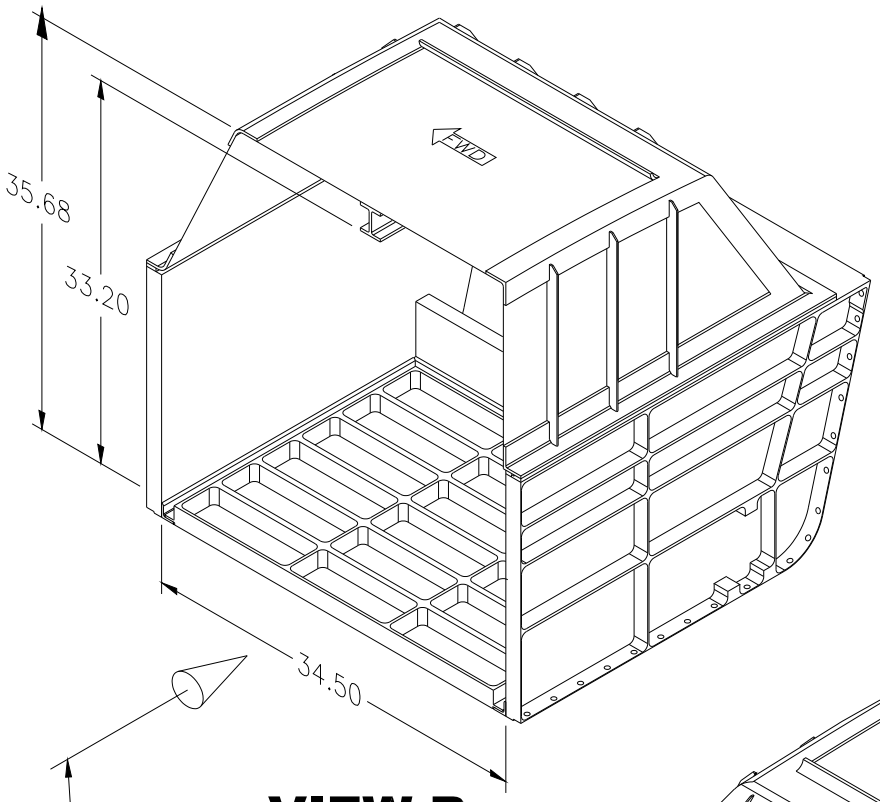

VIEW B

VIEW ARROW FOR
PLAN VIEW "D"
SEE SHEET 3

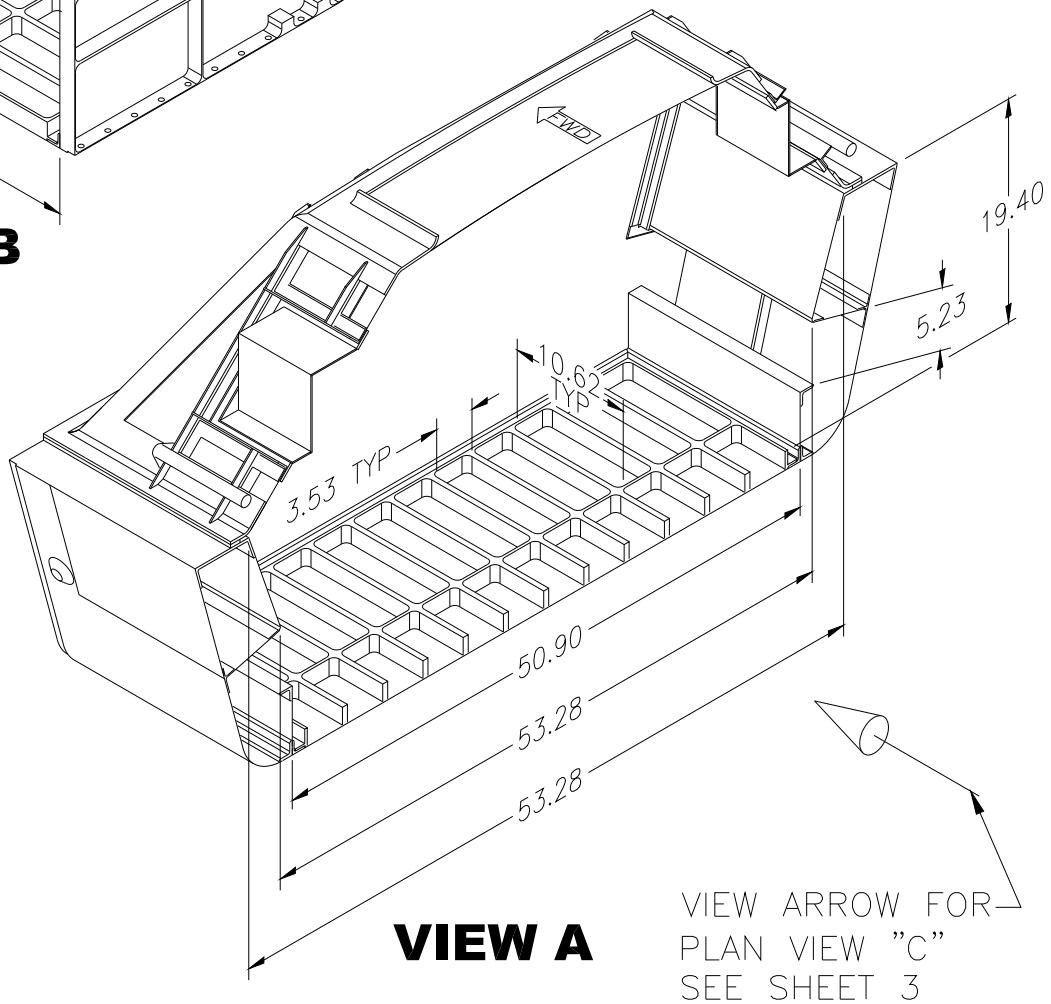

VIEW A

VIEW ARROW FOR
PLAN VIEW "C"
SEE SHEET 3

GENERAL ARRANGEMENT, 3 FT PRESSURIZED PALLET
DWG No. 5711212, SHEET 2 OF 3

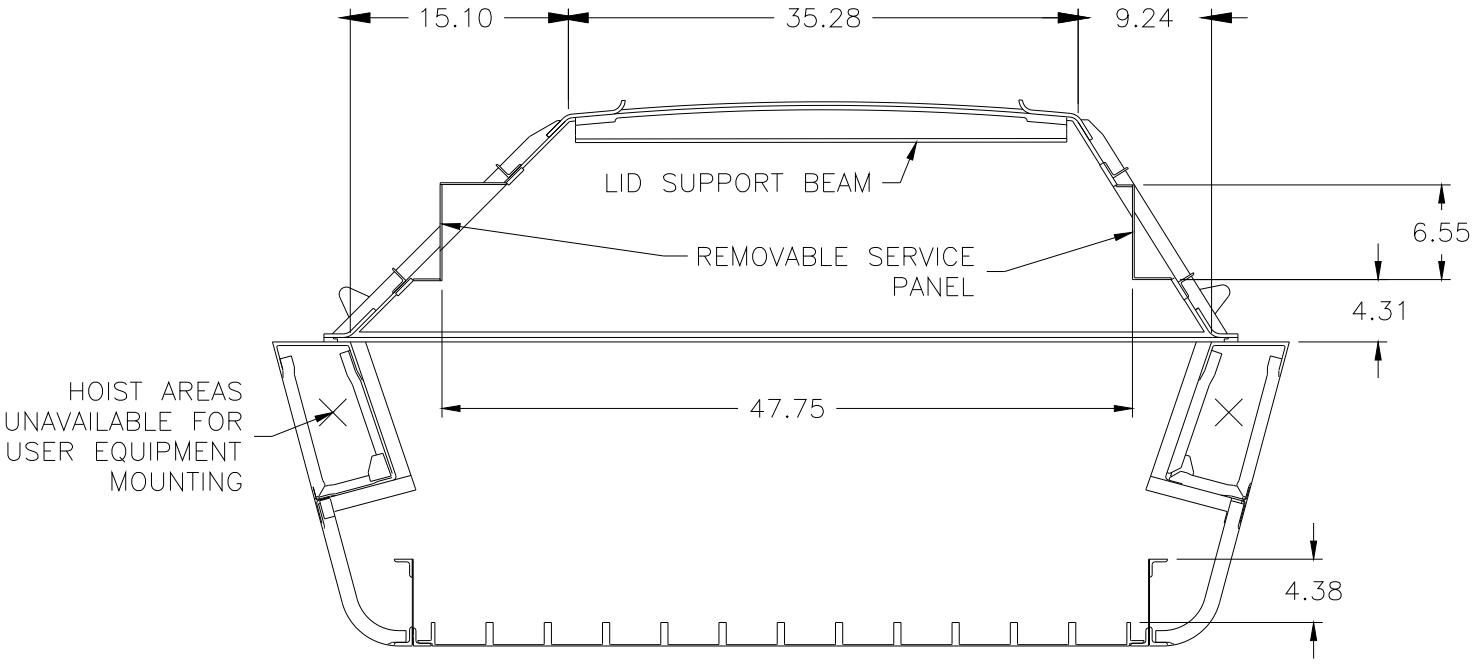

VIEW C

LOOKING FWD

FOR ALIGNMENT PURPOSES, MATCH DRILL USER EQUIPMENT TO SIDE BEAMS AND/OR FLOOR AT TIME OF INSTALLATION

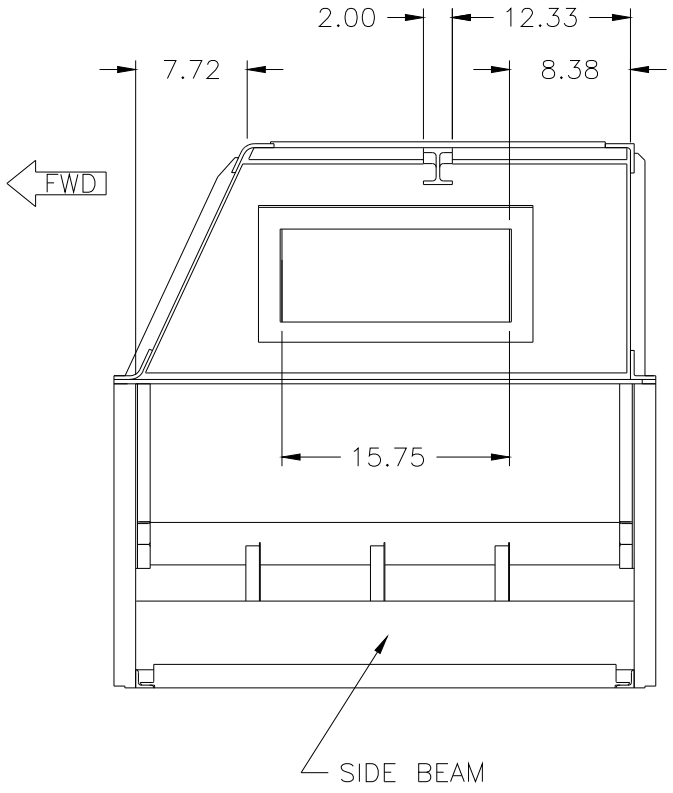

VIEW D

GENERAL ARRANGEMENT, 3 FT PRESSURIZED PALLET
DWG No. 5711212, SHEET 3 OF 3