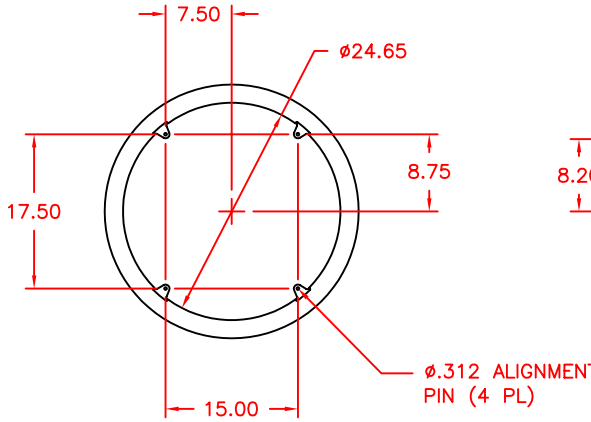

VIEW LOOKING AFT AT POD
(WITH NOSECONE REMOVED)

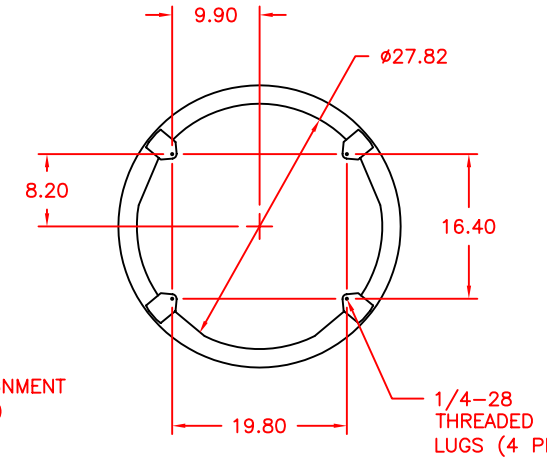

VIEW LOOKING FORWARD AT POD

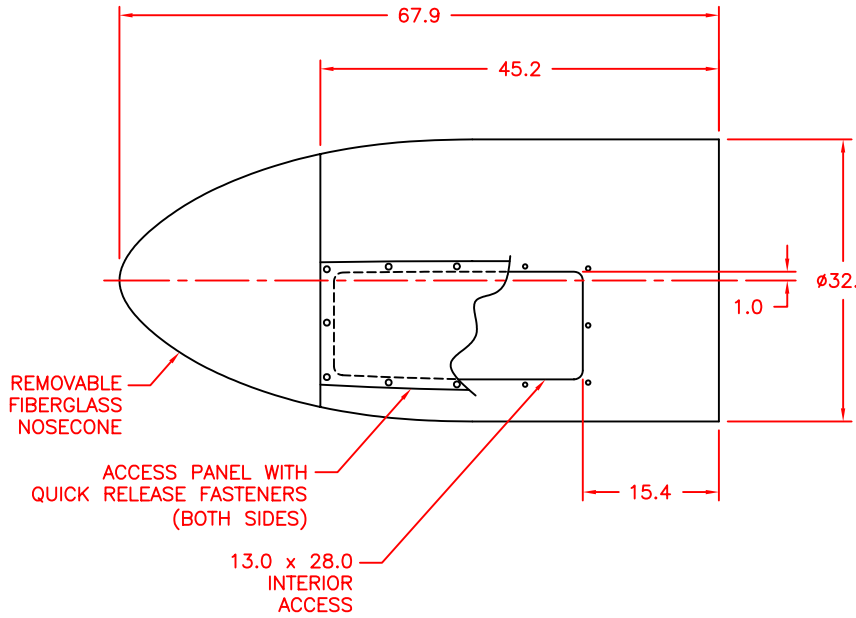

SIGNATURE	DATE	NATIONAL AERONAUTICS & SPACE ADMINISTRATION LYNDON B. JOHNSON SPACE CENTER HOUSTON, TEXAS			
DR	05/11/02	GENERAL ARRANGEMENT, WING POD			
ENG					
CH					
APP					
AUTH		CODE IDENT NO. 21356	SIZE A	DWG NO. 5726001	REV —
EFFECTIVITY: WB-57F		SCALE: 1/16	ACFT ENGRG SECTION CC		SHEET: 1 OF 2

ADD FORM 46-A1 (OCT 97)

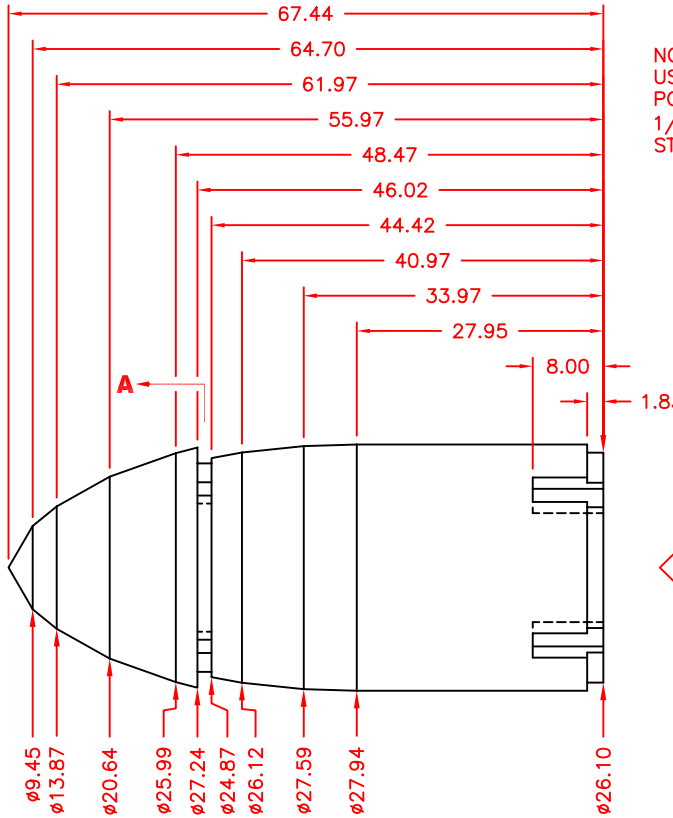

NOTE: THIS DRAWING DESCRIBES THE USABLE VOLUME INSIDE THE WING POD. DIMENSIONS ALLOW FOR A 1/2" CLEARANCE TO POD INTERNAL STRUCTURE.

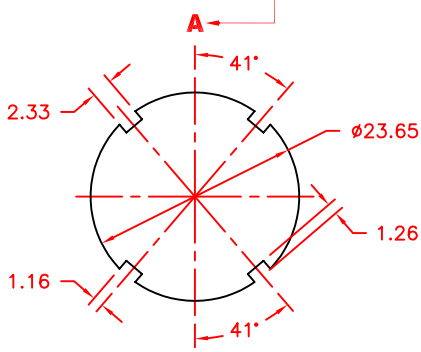

SECTION **A-A**

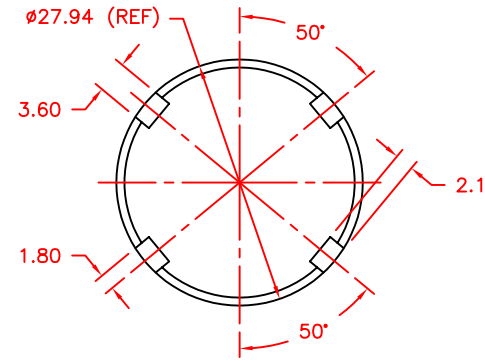

VIEW **B**

GENERAL ARRANGEMENT, WING POD			
CODE IDENT NO. 21356	SIZE A	DWG NO. 5726001	REV —
SCALE: 1/16	ACFT ENGRG SECTION CC		SHEET: 2 OF 2

AOD FORM 46-A1 (OCT 97)